Worldwide Patents Watch

Trauma Products

Report n°1:
January-February 2010

Patents coverage:
Europe, Worldwide (PCT), US & French

Period watch:

- **European patents January 1st to February 28th, 2010**
- **Worldwide (PCT): patents: January 1st to February 28th, 2010**
- **US patents: January 1st to February 28th, 2010**
- **French patents: January 1st to February 28th, 2010**

Published :
July 5th, 2010

France Headquarters :
Tour LITWIN - 10, rue Jean Jaurès
92807 PUTEAUX CEDEX
+ 33 1 47 78 46 00 Site @ : www.avicenne.com
+ 33 1 47 78 46 01 : info@avicenne.com
Société à responsabilité limitée au capital de 36 600 Euros R.C.S. NANTERRE B 385 270 301 000 18 - Code NAF : 742C

Patents published under Europe, Worldwide (PCT), US & French procedures regarding Trauma products and devices

- DEFINITION OF TRAUMATOLOGY PRODUCTS AND DEVICES:
- "Traumatology products & devices" include: screw, blocking screw, cannulated screw, compression screw, plate, pin, suture wire, locking plate, nail, interlocking nail, gamma nail, intramedullary nail, rod, hook, anchor, … Regrouping all products and devices use to treat: fracture, bone consolidation, bone fragment repositioning and accident injuries.

- PATENTS WATCH PROCESS:
- Collecting all publishing patent applications (EP, WO, US & FR) issue from inventory data base and cross checking those informations with the following key words : screw, plate, pin, nail, rod, hook, …. and the notion of trauma products or devices.
- Selecting pertinent documents manually

- ANALYZING PATENT APPLICATIONS:
a) By deposit procedures
- European procedure: this part also includes European patent applications but also all the PCT procedure.
- Worldwide-PCT procedure: including all the modifications on existing re-published patents, regarding claims and/or descriptions.
- US procedure: this part includes all patent applications published after year 2001 and all the patents classified « B1 » those which have not been published yet.
- French procedure.

b) Results presentation report
Patent applications are classified by increasing order publication numbers.

A table synthesizes the total number of patents during the watched period, includes company or inventor names referenced as deposit entity or person (Usually US case).

- REMARKS:

- .Key words selecting research commonly involves lot of outside of the subject patent applications. All documents which are not connected or concerning “The Traumatology” are avoided from the selection.

- DOCUMENTS AVOIDED:

- Products, implants or devices which are not implantable in the body.
- Medicines, pharmaceutics products, bone growth factors, bone substitutes, orthobiologics
- Wounds care products, external devices, orthopaedic braces, splints, appliances and orthesis are not included in the selection.

Patents published under Europe, Worldwide (PCT), US & French procedures regarding Trauma products and devices

Report n°1:
January-February 2010

Patents coverage:
Europe (PCT), Worldwide, US & French
Period watch:
- European patents: January 1st to February 28th, 2010
- Worldwide (PCT) patents: January 1st to February 28th, 2010
- US patents: January 1st to February 28th, 2010
- French patents: January 1st to February 28th, 2010

Total number of patent applications published during the selecting period: 92

COUNTRIES	APPLICANT, INVENTOR OR REGISTRATION NAMES
FRANCE	- CASTRONOVO G. - D.L.P. / DEROUET G. - FOURNITURES HOSPITALIERES INDUSTRIE SAS / CERMOLACCE C. / DETERME P. / LAFFENETRE O. / DE LA VIGNE C. - NEWDEAL SAS
GERMANY	- BIEDERMANN MOTECH GMBH - BRAINLAB AG - BUCK A. - MICHEL G. - NEUE MAGNETODYN GMBH - STRYKER TRAUMA GMBH - TANTUM AG / JENSEN H-I. / LÜCKERT O.
UK	- BROWN M / MONTES DE OCA BALDERAS H. / HOWLING G. HALL M. / CHIVERS R. / MARSH A. - DAGGER A. / CHIVERS R. / WILSON D. / BROWN M. / HOWLING G. / MONTES DE OCA BALDERAS H. / DOOTSON G. / MILNER R. - DAGGER A. / WILSON D. / CHIVERS R. / BROWN M. / HOWLING G. / DOOTSON G. / MONTES DE OCA BALDERAS H. / MILNER R. - SMITH & NEPHEW PLC / CURRAN S. / RIDGWAY J. / CHEN P-S. / PRATT M. / TANNER M. / LATHAM S. / REBACK N. - SMITH & NEPHEW PLC / MONTES DE OCA BALDERAS H. / BROWN M. / THOMPSON A. / HOWLING G. - SMITH & NEPHEW PLC / WILSON D. / GUNNING P. / MORGAN R. / MILNER R. / HOWLING G.

COUNTRIES	APPLICANT, INVENTOR OR REGISTRATION NAMES
SWITZERLAND	- AO TECHNOLOGY AG / WINDOLF M. - BIOTRONIK VI PATENT AG - FIECHTER M. / SOMMER T. / MAURER S. - SYNTHES GMBH - WOODWELDING AG
AUSTRIA	- MEDIZINISCHE UNIVERSITÄT WIEN / ERHART J / UNGER E. / MAYR W.
HUNGARIA	- NYÁRÁDY J.
SWEDEN	- SWEMAC INNOVATION AB / HANSSON H.
NORWAY	- NUMAT AS
USA	- AMEI TECHNOLOGIES INC - AMEI TECHNOLOGIES INC / BRIGIDO S. - ARCH DAY DESIGN LLC - ARCH DAY DESIGN LLC / MORRIS S. / WEISEL T. / PISARNWONGS R. - ASFORA IP LLC - BIOPRO INC - DEPUY PRODUCTS INC / HUEBNER D. / HAIDUKEWYCH G. / LINDSAY G. M. / TSUKAYAMA C. / SANDERS R. - DEPUY PRODUCTS INC / SCHULZE D. - DEPUY PRODUCTS INC / YAMAZAKI K. / CHRISTIE C. / METZINGER A. / BERTHUSEN A. - DFINE INC - EBI LLC / FRANK P. / O'REILLY J. / ELGHAZALY T. - GELFAND J. - HAIDUKEWYCH G. / HUEBNER D. / SANDERS R. / LINDSAY M. / TSUKAYAMA C. - HAUPT B. - HAYES S. / REGLOS J. / ALTARAC M. / KIM D. - HUEBNER D. / HAIDUKEWYCH G. / LINDSAY M. / TSUKAYAMA C. - LEMOINE J. - KRUEGER J. / LINDERMAN E. / MINGIONE L. / SCHAUS E. / KANTOLA J. / REILLY T. / MASSI S. - MacDEVITT D. - MARTIN M. - MILLER P. / LEMOINE J. - NORTH CAROLINA STATE UNIVERSITY - NEBOSKY P. / ZIMMERMAN S. / STALCUP G. - NEBOSKY P. / ZIMMERMAN S. / STALCUP G. / KNAPP T.

COUNTRIES	APPLICANT, INVENTOR OR REGISTRATION NAMES
USA	- NELSON C. / SARAVIA H. / MCDANIEL S. / HO PHAM T. / MAZUR K. / GUNTHER S. / BROWN N. - OSTEOMED L.P. - OSTEOMED L.P. / TERRES J. / AHMAD S. / THORNHILL L. / MILES III S. / MOCANU V. - ROBINSON J. - SMEDTA/TD LLC / NEBOSKY P. / ZIMMERMAN S. / STALCUP G. - SIMPIRICA SPINE INC - SMITH & NEPHEW INC / BETTENGA M. / RAINS J. / ROSE J. - SMITH & NEPHEW INC / ROSE J. / JANNA S. / LEWIS T. / MARTIN C. / PATTERSON W. / RAINS J. / GAN L. / WILHELM H. / AUSTIN G. - SMITH & NEPHEW INC / ROSE J. / LEWIS M. / MARTIN C. / PATTERSON W. / RAINS J. / GAN L. / JANNA S. / WILHELM H. / BRUMFIELD D. / CHIVERS R. / AUSTIN G. / - SOLOMON C. / SOLOMON T. - STALCUP G. / ZIMMERMAN S. / NEBOSKY P. - STOUT MEDICAL GROUP L.P. - SYNTHES USA LLC - SYNTHES USA LLC / SIRAVO M. - THE UNIVERSITY OF NORTH CAROLINA AT CHAPEL HILL / DAHNERS L. / WARNER N. - UNDERHILL M. - UNIVERSITY OF LOUISVILLE RESEARCH FOUNDATION INC - UNIVERSITY OF LOUISVILLE RESEARCH FOUNDATION INC / VOOR M. - UNIVERSITY OF PITTSBURGH - OF THE COMMONWEALTH SYSTEM OF HIGHER EDUCATION / PAYNE T. / JANKOWSKI R. / USAS A. / PAYNE K. / HUARD J. - USOCK LLC / KOLLMER C. - VERTIFLEX INC / HAYES S. / REGLOS J. / ALTARAC M. / KIM D. - VERTIFLEX INC / ALTARAC M. / HAYES K. / REGLOS J. / HERTY C. / KIM D. - WARSAW ORTHOPEDIC INC - WARSAW ORTHOPEDIC INC / EDIE J. / SCHULTZ M. - WARSAW ORTHOPEDIC INC / MCKAY W. - WARSAW ORTHOPEDIC INC / TRIEU H. - WRIGHT MEDICAL TECHNOLOGY INC
CANADA	- BIOSYNTECH CANADA INC - SMIT A.
URUGUAY	- FERNANDEZ DELL'OCA A.

COUNTRIES	APPLICANT, INVENTOR OR REGISTRATION NAMES
ISRAEL	- BEN-GURION UNIVERSITY OF THE NEGEV RESEARCH AND DE - HEPACORE LTD - ORTHO-SPACE LTD
JAPAN	- KURUME UNIVERSITY / NAKAMURA H. - NAKAMURA S.
KOREA	- NATIONAL CANCER CENTER - PARK G-H. / MOON S-J.
TAIWAN	- LEE S-T. / CHEN J-F. / WU C-T. / HSU H-H. / LIU N-C.

Patent applications

European procedure

EP 2139414 /
WO 2008/145902
1/3

(12) DEMANDE INTERNATIONALE PUBLIÉE EN VERTU DU TRAITÉ DE COOPÉRATION EN MATIÈRE DE BREVETS (PCT)

(19) Organisation Mondiale de la Propriété Intellectuelle
Bureau international

(43) Date de la publication internationale
4 décembre 2008 (04.12.2008)

PCT

= EP 2139414

(10) Numéro de publication internationale
WO 2008/145902 A3

(51) Classification internationale des brevets : *A61B 17/80* (2006.01)

(21) Numéro de la demande internationale : PCT/FR2008/050688

(22) Date de dépôt international : 17 avril 2008 (17.04.2008)

(25) Langue de dépôt : français

(26) Langue de publication : français

(30) Données relatives à la priorité :
0702777 17 avril 2007 (17.04.2007) FR

(71) Déposant *(pour tous les États désignés sauf US)* : **D.L.P.** [FR/FR]; ZA du Patis, Rue de la Fontaine Grillée, F-44690 La Haye Fouassiere (FR).

(72) Inventeur; et
(75) Inventeur/Déposant *(pour US seulement)* : **DEROUET, Guillaume** [FR/FR]; 19 Rue Suzanne Valadon, F-44800 Saint-herblain (FR).

(74) Mandataires : **MICHELET, Alain** etc.; Cabinet HARLE et PHELIP, 7 rue de Madrid, F-75008 Paris (FR).

(81) États désignés *(sauf indication contraire, pour tout titre de protection nationale disponible)* : AE, AG, AL, AM, AO, AT, AU, AZ, BA, BB, BG, BH, BR, BW, BY, BZ, CA, CH, CN, CO, CR, CU, CZ, DE, DK, DM, DO, DZ, EC, EE, EG, ES, FI, GB, GD, GE, GH, GM, GT, HN, HR, HU, ID, IL, IN, IS, JP, KE, KG, KM, KN, KP, KR, KZ, LA, LC, LK, LR, LS, LT, LU, LY, MA, MD, ME, MG, MK, MN, MW, MX, MY, MZ, NA, NG, NI, NO, NZ, OM, PG, PH, PL, PT, RO, RS, RU, SC, SD, SE, SG, SK, SL, SM, SV, SY,

[Suite sur la page suivante]

(54) Title: IMPLANTABLE ORTHOPAEDIC DEVICE COMPOSED OF A SUPPORT STRUCTURE HAVING AT LEAST ONE ORIFICE ASSOCIATED WITH A NUT, FOR THE PASSAGE OF A LOCKING SCREW

(54) Titre : DISPOSITIF ORTHOPEDIQUE IMPLANTABLE CONSTITUE D'UNE STRUCTURE SUPPORT MUNIE D'AU MOINS UN ORIFICE ASSOCIE A UN ECROU, POUR LE PASSAGE D'UNE VIS DE FIXATION

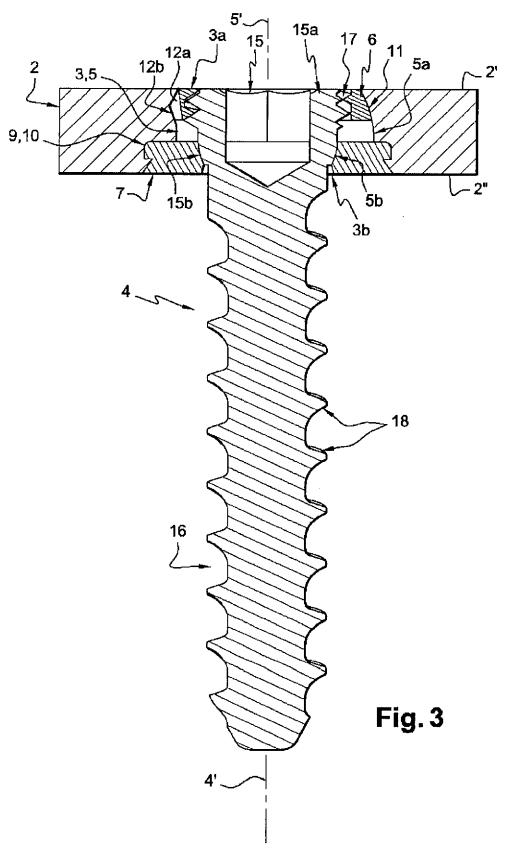

Fig. 3

(57) Abstract: This implantable orthopaedic device comprises a support structure (2) having an orifice (3) that delimits a seat (5) for receiving a nut (6) intended to cooperate with a locking screw (4). The seat (5) comprises an upper part (5a) and a lower part (5b), both shaped as truncated spheres and concentric to each other. Furthermore, the nut (6) has a spherical contour (11), and the screw head (15) has a lower part (15b), also with a spherical contour, and an upper part (15a) provided with a thread (17). The upper (15a) and lower (15b) parts of the screw head (15) cooperate respectively with the complementary thread (14) of the nut (6) and with the lower part (5b) of the receiving seat (5) such that, in the final phase of screwing, they tend to move said nut (6) away from the part (5b) of the seat (5) and thus bring about the forced bearing of the spherical contour (11) of the nut (6) against the upper spherical part (5a) of the seat (5), and of the lower part of the screw head (15b) against the lower spherical part (5b) of the seat (5).

(57) Abrégé : Ce dispositif orthopédique implantable comprend une structure support (2) munie d'un orifice (3) délimitant un logement (5) d'accueil d'un écrou (6) destiné à coopérer avec une vis de fixation (4). Le logement (5) comporte une partie supérieure (5a) et une partie inférieure (5b) toutes deux en tronc de sphère, concentriques l'une par rapport à l'autre. D'autre part, l'écrou (6) comporte un contour sphérique (11) et la tête de vis (15) comporte une partie inférieure (15b), également à contour sphérique, ainsi qu'une partie supérieure (15a) munie d'un filetage (17). Les parties supérieure (15a) et inférieure (15b) de la tête de vis (15) coopèrent respectivement avec le filetage complémentaire (14) de l'écrou (6) et avec la partie inférieure (5b) du logement de réception (5) pour tendre, en

[Suite sur la page suivante]

WO 2008/145902 A3

EP 2139414 /
WO 2008/145902

2/3

TJ, TM, TN, TR, TT, TZ, UA, UG, US, UZ, VC, VN, ZA, ZM, ZW.

(84) États désignés *(sauf indication contraire, pour tout titre de protection régionale disponible)* **:** ARIPO (BW, GH, GM, KE, LS, MW, MZ, NA, SD, SL, SZ, TZ, UG, ZM, ZW), eurasien (AM, AZ, BY, KG, KZ, MD, RU, TJ, TM), européen (AT, BE, BG, CH, CY, CZ, DE, DK, EE, ES, FI, FR, GB, GR, HR, HU, IE, IS, IT, LT, LU, LV, MC, MT, NL, NO, PL, PT, RO, SE, SI, SK, TR), OAPI (BF, BJ, CF, CG, CI, CM, GA, GN, GQ, GW, ML, MR, NE, SN, TD, TG).

Déclaration en vertu de la règle 4.17 :

— *relative à la qualité d'inventeur (règle 4.17.iv))*

Publiée :

— *avec rapport de recherche internationale*

— *avant l'expiration du délai prévu pour la modification des revendications, sera republiée si des modifications sont reçues*

(88) Date de publication du rapport de recherche internationale: 5 mars 2009

phase finale de vissage, à éloigner ledit écrou (6) par rapport à la partie (5b) du logement (5) et ainsi provoquer l'appui forcé - du contour sphérique (11) de l'écrou (6) contre la partie sphérique supérieure (5a) du logement (5) et - de la partie inférieure de la tête de vis (15b) contre la partie sphérique inférieure (5b) du logement (5).

et elle en ressort par la face inférieure 2", cette dernière étant destinée à venir en appui contre le matériau osseux de réception (non représenté).

De manière générale, la plaque support 2 peut comporter plusieurs orifices traversants 3 convenablement agencés les uns par rapport aux autres.

Ce type d'implant orthopédique est en particulier destiné à être positionné sur un os fracturé (non représenté), par exemple une épiphyse de radius.

Sur les figures 3 et 4, on remarque que l'orifice traversant 3 s'étend au travers d'un logement 5 dans lequel est positionné et emprisonné un écrou 6 apte à coopérer avec un filetage complémentaire de la vis de fixation 4.

L'écrou 6 comporte un certain degré de liberté au sein de son logement de réception 5, selon un domaine d'inclinaison prédéterminé admissible, pour obtenir un verrouillage efficace de la vis de fixation 4 en fin de vissage dans le matériau osseux de réception, ceci quelle que soit l'orientation admissible de son axe 4' par rapport à l'axe 5' de l'orifice traversant 3 associé. En outre, cet écrou 6 est bloqué en rotation dans son logement de réception 5, de sorte à empêcher sa rotation autour de son axe 6'.

La paroi centrale de l'orifice traversant 3 délimite le logement de réception 5 précité. L'orifice traversant 3 et le logement 5 ont le même axe 5'.

Le logement 5 de réception de l'écrou 6 est en particulier délimité, en partie supérieure (c'est-à-dire du côté de la surface 2' du support 2) par une surface 5a en forme générale de tronc de sphère, et en partie inférieure, par une surface 5b, également en tronc de sphère (cette surface 5b est destinée à venir se positionner du côté du matériau osseux de réception).

Les surfaces 5a et 5b sont concentriques ; elles sont centrées en un point situé sur l'axe 5' de l'orifice 3, dans l'épaisseur du support 2.

La partie supérieure 5a a un rayon supérieur à celui de la partie inférieure 5b ; de même, le diamètre de la bordure débouchante supérieure 3a de l'orifice traversant 3 est supérieur à celui de sa bordure débouchante inférieure 3b.

Plus précisément, la partie supérieure 5a du logement 5 est obtenue par un usinage approprié de la structure support 2 ; cette partie supérieure 5a est ainsi réalisée monobloc avec la structure support 2, ce qui optimise en particulier sa résistance aux forces de poussée.

La partie inférieure 5b du logement 5 est formée par la surface centrale d'un clip 7 rapporté, représenté en détails sur la figure 4. Ce clip 7 permet le verrouillage de l'écrou 6 dans son logement de réception 5, une fois convenablement rapporté.

EP 2139532/
WO 2008/112880
1/4

(12) INTERNATIONAL APPLICATION PUBLISHED UNDER THE PATENT COOPERATION TREATY (PCT)

(19) World Intellectual Property Organization
International Bureau

(43) International Publication Date
18 September 2008 (18.09.2008)

PCT

= EP 2139532

(10) International Publication Number
WO 2008/112880 A3

(51) International Patent Classification:
A61L 27/14 (2006.01) *A61L 31/04* (2006.01)
A61L 27/50 (2006.01) *A61L 31/14* (2006.01)

(21) International Application Number:
PCT/US2008/056836

(22) International Filing Date:
13 March 2008 (13.03.2008)

(25) Filing Language: English

(26) Publication Language: English

(30) Priority Data:

60/894,505	13 March 2007 (13.03.2007)	US
60/912,684	18 April 2007 (18.04.2007)	US
60/912,845	19 April 2007 (19.04.2007)	US
60/989,113	19 November 2007 (19.11.2007)	US

(71) Applicant *(for all designated States except US)*: **SMITH & NEPHEW, INC.** [US/US]; 150 Minuteman Road, Andover, MA 01810 (US).

(71) Applicant *(for US only)*: **BETTENGA, Mason** [US/US]; 3559 Kenwood Avenue, Memphis, TN (US).

(72) Inventors; and
(75) Inventors/Applicants *(for US only)*: **BROWN, Malcolm** [GB/GB]; 89 Wrenbeck Drive, Otley, Yorkshire (GB). **MONTES DE OCA BALDERAS, Horacio** [GB/GB]; 149 Lawrence Street, York, Yorkshire (GB). **HOWLING, Graeme** [GB/GB]; 25 Talbot Avenue, Roundhay, Leeds, Yorkshire (GB). **RAINS, James** [US/US]; 8963 Bridlewood Lane, Cordova, TN (US). **ROSE, John** [GB/US]; 947 Hardwood View Cove, Collierville, TN (US). **HALL, Michael** [GB/GB]; 54 Lancaster Road, Linthorpe, Middlesbrough, Yorkshire (GB). **CHIVERS, Robin** [GB/GB]; 20 Owlwood Lane, Dunnington, Horkshire (GB). **MARSH, Andy** [GB/GB]; 28 Halcyon House, The Water Front, Selby, Yorkshire (GB).

(74) Agent: **HAINER, Norman, F., Jr.**; 150 Minuteman Road, Andover, MA 01810 (US).

(81) Designated States *(unless otherwise indicated, for every kind of national protection available)*: AE, AG, AL, AM, AO, AT, AU, AZ, BA, BB, BG, BH, BR, BW, BY, BZ, CA, CH, CN, CO, CR, CU, CZ, DE, DK, DM, DO, DZ, EC, EE, EG, ES, FI, GB, GD, GE, GH, GM, GT, HN, HR, HU, ID, IL, IN, IS, JP, KE, KG, KM, KN, KP, KR, KZ, LA, LC, LK, LR, LS, LT, LU, LY, MA, MD, ME, MG, MK, MN, MW, MX, MY, MZ, NA, NG, NI, NO, NZ, OM, PG, PH, PL, PT, RO, RS, RU, SC, SD, SE, SG, SK, SL, SM, SV, SY, TJ, TM, TN, TR, TT, TZ, UA, UG, US, UZ, VC, VN, ZA, ZM, ZW.

(84) Designated States *(unless otherwise indicated, for every kind of regional protection available)*: ARIPO (BW, GH, GM, KE, LS, MW, MZ, NA, SD, SL, SZ, TZ, UG, ZM, ZW), Eurasian (AM, AZ, BY, KG, KZ, MD, RU, TJ, TM), European (AT, BE, BG, CH, CY, CZ, DE, DK, EE, ES, FI, FR, GB, GR, HR, HU, IE, IS, IT, LT, LU, LV, MC, MT, NL, NO, PL, PT, RO, SE, SI, SK, TR), OAPI (BF, BJ, CF, CG, CI, CM, GA, GN, GQ, GW, ML, MR, NE, SN, TD, TG).

Published:

— *with international search report (Art. 21(3))*

— *before the expiration of the time limit for amending the claims and to be republished in the event of receipt of amendments (Rule 48.2(h))*

(88) Date of publication of the international search report:
3 December 2009

WO 2008/112880 A3

(54) Title: SYSTEMS AND METHODS FOR INSTALLING AND REMOVING AN EXPANDABLE POLYMER

(57) Abstract: The present disclosure relates to systems and methods for installing shape memory polymers relative to orthopedic implants.

EP 2139532/
WO 2008/112880
4/4

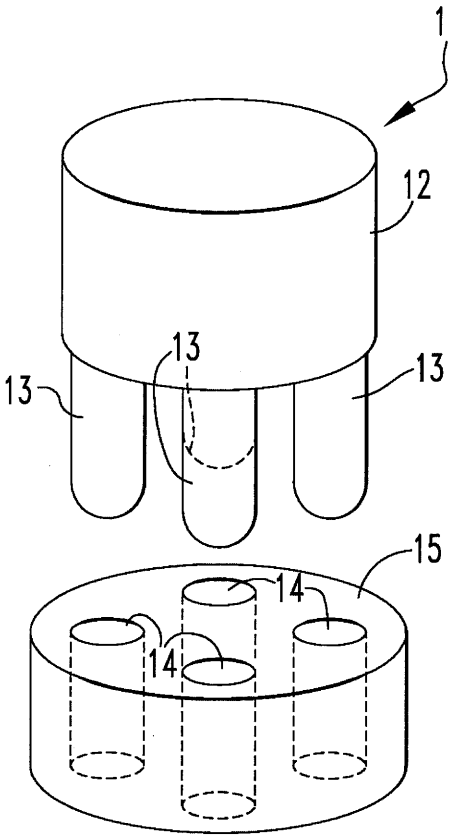

FIG.2A

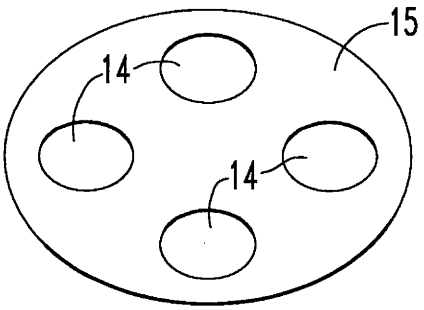

FIG.2B

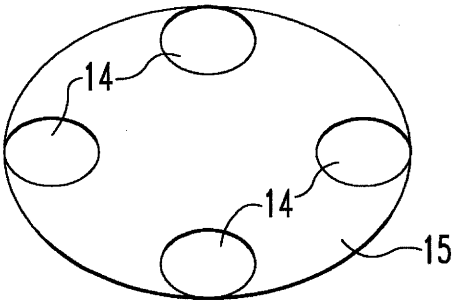

FIG.2C

EP 2139532/
WO 2008/112880

3/4

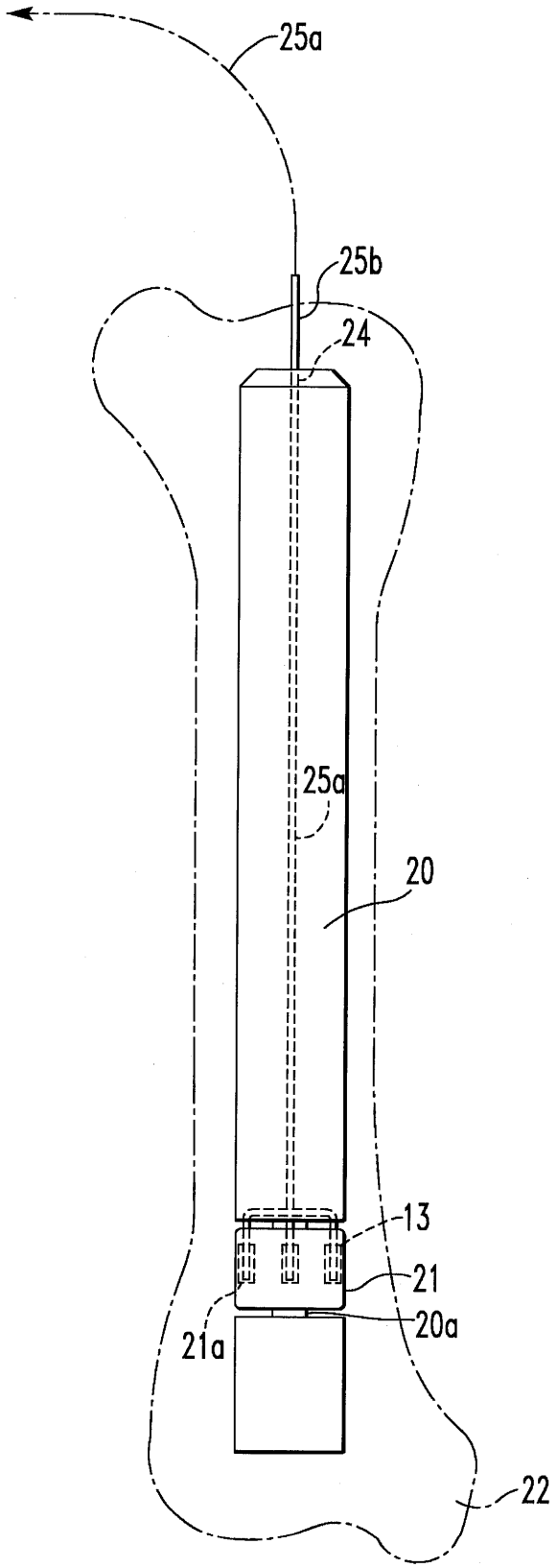

FIG.3

that the channel **6a** may extend along the width or diameter of the sleeve **6** rather than the length.

[0044] Figure 2a shows a heater head **11** composed of a cartridge heater **12** with multiple probe attachments **13** composed of a highly conducting material such as metal, ceramics or alloys. The multiple probes are designed to fit into a component **15** having corresponding holes **14** with a diameter that is similar the diameter of the heater probes **13**. The component includes a shape memory polymer material. Similar to the heating device **2** in Fig. 1, heater head **12** may be coupled to a temperature control unit via a wire for supplying heat to the probes **13**. The probes **13**, once deployed, interface well with the component **15** to maximize the surface area contact and ensure good heat transfer from the probes **13** to the component **15**, as described above. The holes **14** may be located in central positions in the component **15**, as shown in Fig. 2b, or on the periphery of the component **15**, as shown in Fig. 2c. The choice of positions can be modified to tailor the relaxation profile of the polymer material **15**. For instance, by heating the component material **15** from the periphery, as in Fig. 2c, improved relaxation of the polymer chains of the material **15** and hence improved mechanical properties of the polymer may be obtained due to the possibility of there being more uniform heating across the entire component **15**, rather than just at the center.

[0045] The sleeves/components **6,15** described above may be used to stabilize bone fractures by inserting the sleeves/components **6,15** into the intramedullary canal of the bone, such that the sleeves/components **6,15** extend across the fracture, and providing the sleeves/components **6,15** with energy, via the method described above, to allow for radial expansion of the sleeves/components **6,15**. Upon expansion, the sleeves/components **6,15** engage the inner cavity of the bone and become fixated to the bone, thereby stabilizing the fracture. Alternatively, the sleeves/components **6,15** may be used to fixate internal fixation

EP 2 140 823

1/2

(19) Europäisches Patentamt
European Patent Office
Office européen des brevets

(11) EP 2 140 823 A1

(12) EUROPEAN PATENT APPLICATION

(43) Date of publication:
06.01.2010 Bulletin 2010/01

(51) Int Cl.:
A61B 17/56 (2006.01)

(21) Application number: 08161858.9

(22) Date of filing: 05.08.2008

(84) Designated Contracting States:
AT BE BG CH CY CZ DE DK EE ES FI FR GB GR HR HU IE IS IT LI LT LU LV MC MT NL NO PL PT RO SE SI SK TR
Designated Extension States:
AL BA MK RS

(30) Priority: 23.06.2008 KR 20080059222

(71) Applicant: National Cancer Center
Goyang-si
Gyeonggi-do 410-352 (KR)

(72) Inventor: Kang, Hyun Guy
960-3, Madu 1-dong
410-351, Goyang-si (KR)

(74) Representative: Bassil, Nicholas Charles et al
Kilburn & Strode LLP
20 Red Lion Street
London WC1R 4PJ (GB)

Remarks:
Amended claims in accordance with Rule 137(2) EPC.

(54) Pin assembly for operation

(57) A pin assembly (100,100',100") for operation includes a hollow pin (10a,10c,10f) for operation having a plurality of side holes (30) defined through a wall thereof, and a root part (20) which is closed, or open due to the presence of a through-hole (40); and a hollow support member (60) having a pin fastening part formed therein in the shape of a groove (65) to fasten one end of the pin for operation, and being open at both ends thereof, wherein the pin for operation is fastened to the pin fastening part of the support member, and by applying external force to one end of the support member, the pin for operation is inserted into a bone. Medication or cement can be injected through a pin.

【FIG. 2】

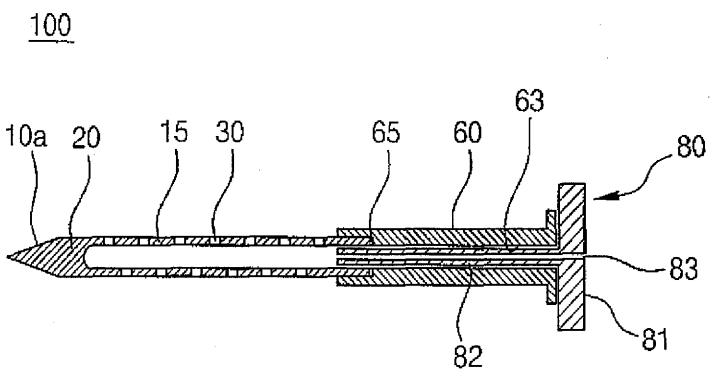

EP 2 140 823 A1

Description

BACKGROUND OF THE INVENTION

Field of the Invention

[0001] The present invention relates to a pin assembly for operation and, more particularly, to a bendable pin assembly for operation in which a plurality of holes are defined through the wall and the root part thereof so that various medication and treatment agent can be easily injected.

Description of the Related Art

[0002] These days, despite the development of diagnosis and treatment techniques for cancer patients whose number gradually increases, the number of patients who suffer pain due to spreading of cancer to the bone also increases. In America, 1.2 millions of cancer patients occur every year, and among these people, bone metastasis has been reported in six hundred thousands constituting 50%.

[0003] If cancer cells spread to the bone, the bone is likely to be adsorbed and weakened to develop to fracture or imminent fracture. In this case, though surgical treatment is necessary, since the general condition of a patient is unstable, the patient cannot be ready to receive a major operation. Otherwise, even when the patient is ready to receive the major operation, because extensive incision of the skin and the muscle is needed, anticancer medicine treatment which is essential to the treatment of metastasis cannot be conducted for a certain period before and after the operation. Due to this fact, a number of patients suffering bone metastasis cannot properly lead basic everyday life while not receiving surgical treatment and must be ready to suffer serious pains.

[0004] In addition to the bone metastasis, as the aging of population proceeds, the number of patients suffering senile fracture and osteoporotic fracture increases. In this case, aged patients have a bone union period longer than that of young people, and even when surgical treatment is conducted, it is the norm to securely hold a fractured portion for an extended period. Due to this fact, in the course of treating the patients suffering senile fracture or osteoporotic fracture, complications such as fracture nonunion, unstable general condition and weakened limb activity may be caused.

[0005] Therefore, endeavors for increasing the satisfactoriness of patients by quickly and simply conducting surgical treatment for the fractured or damaged bone without causing complications while preserving stable general condition of aged patients or cancer patients and not hindering anticancer medicine treatment are keenly demanded.

[0006] However, in methods for reinforcing a bone weakened in the course of eliminating cancer cells spread to the bone or treating a fracture and for operating a fractured bone, which have disclosed so far in the art, after the skin and the muscle are incised over an extensive range, tumor is curetted, or a fractured portion of the bone is securely held using an artificial joint such as a large metal implant or plate, a tumor replacement, and the like, or is supported using an artificial aid.

[0007] In these methods, research has been conducted such that material for promoting bone regeneration or agent for suppressing bone resorption is directly coated at an area where the artificial joint is driven into the bone. Alternatively, after a metal pin is inserted into the fractured portion, the bone replacement as a bone regeneration inducer is injected separately by defining a hole in the bone. Also, in the case of osteoporotic vertebral compression fracture or spine metastasis, a method has been used, in which only bone cement is injected into the vertebral body through a pedicle in an effort to reinforce the spine.

[0008] Therefore, due to the extensive operation, in order to receive anticancer medicine treatment after the operation is conducted, it is necessary to wait until the wound is completely recovered. Also, because of side effects due to anesthesia and bleeding, the general condition of a patient is likely to be rapidly worsened so that the patient's life can be placed under a dangerous situation. Furthermore, when securing the artificial aid to the fractured portion of the bone, if the patient suffers serious osteoporosis, since the bone is weak, fasteners are apt to be released.

SUMMARY OF THE INVENTION

[0009] Accordingly, the present invention has been made keeping in mind the above problems occurring in the related art, and an object of the present invention is to provide a pin assembly for operation which can solve the problems caused due to extensive surgery and allow medication or treatment agent to be easily injected to a treatment position, wherein, after a pin for operation is percutaneously inserted without the need of incision of the skin or the muscle, various medication is injected into the bone through the fastened pin to cause the death of cancer cells, and by injecting bone cement or anticancer medicine mixed with bone cement, a fractured bone can be securely held and the strength of the fractured bone can be increased.

[0010] Another object of the present invention is to provide a pin assembly for operation which allows medication such as bone regenerating material and anti-resorptive agent to be easily injected without the need of separately defining an opening in a fractured portion after the fractured portion is securely held in the case of senile fracture caused due to osteoporosis.

[0011] In order to achieve the above objects, according to one aspect of the present invention, there is provided a pin assembly for operation, comprising a hollow pin for operation having a plurality of side holes defined through a wall thereof and a root part which is closed or open due

EP 2142119 / WO 2008/115549

1/3

(12) INTERNATIONAL APPLICATION PUBLISHED UNDER THE PATENT COOPERATION TREATY (PCT)

(19) World Intellectual Property Organization
International Bureau

= EP 2142 119

(43) International Publication Date
25 September 2008 (25.09.2008)

PCT

(10) International Publication Number
WO 2008/115549 A1

(51) International Patent Classification:
A61B 17/56 (2006.01) *A61F 2/30* (2006.01)
A61B 17/58 (2006.01)

(21) International Application Number:
PCT/US2008/003677

(22) International Filing Date: 20 March 2008 (20.03.2008)

(25) Filing Language: English

(26) Publication Language: English

(30) Priority Data:
11/726,093 20 March 2007 (20.03.2007) US

(71) Applicant *(for all designated States except US)*: **VERTIFLEX, INC.** [US/US]; 1351 Calle Avanzado, San Clemente, CA 92673 (US).

(72) Inventors; and
(75) Inventors/Applicants *(for US only)*: **ALTARAC, Moti** [IL/US]; 67 Coriander, Irvine, CA 92603 (US). **HAYES, Stanley, Kyle** [US/US]; 26721 Magdalena Lane, Mission Viejo, CA 92691 (US). **REGLOS, Joey, Camia** [US/US]; 22896 Willard Avenue, Lake Forest, CA 92630 (US). **FLAHERTY, J., Christopher** [US/US]; 242 Ipswich Road, Topsfield, MA 01983 (US). **KIM, Daniel, H.** [US/US]; 411 Los Ninos Way, Los Altos, CA 94022 (US).

(74) Agent: **LUKAS, Rimas**; Vertiflex, Inc., 1351 Calle Avanzado, San Clemente, CA 92673 (US).

(81) Designated States *(unless otherwise indicated, for every kind of national protection available)*: AE, AG, AL, AM, AO, AT, AU, AZ, BA, BB, BG, BH, BR, BW, BY, BZ, CA, CH, CN, CO, CR, CU, CZ, DE, DK, DM, DO, DZ, EC, EE, EG, ES, FI, GB, GD, GE, GH, GM, GT, HN, HR, HU, ID, IL, IN, IS, JP, KE, KG, KM, KN, KP, KR, KZ, LA, LC, LK, LR, LS, LT, LU, LY, MA, MD, ME, MG, MK, MN, MW, MX, MY, MZ, NA, NG, NI, NO, NZ, OM, PG, PH, PL, PT, RO, RS, RU, SC, SD, SE, SG, SK, SL, SM, SV, SY, TJ, TM, TN, TR, TT, TZ, UA, UG, US, UZ, VC, VN, ZA, ZM, ZW.

(84) Designated States *(unless otherwise indicated, for every kind of regional protection available)*: ARIPO (BW, GH, GM, KE, LS, MW, MZ, NA, SD, SL, SZ, TZ, UG, ZM,

[Continued on next page]

(54) Title: SCREW SYSTEMS AND METHODS FOR USE IN STABILIZATION OF BONE STRUCTURES

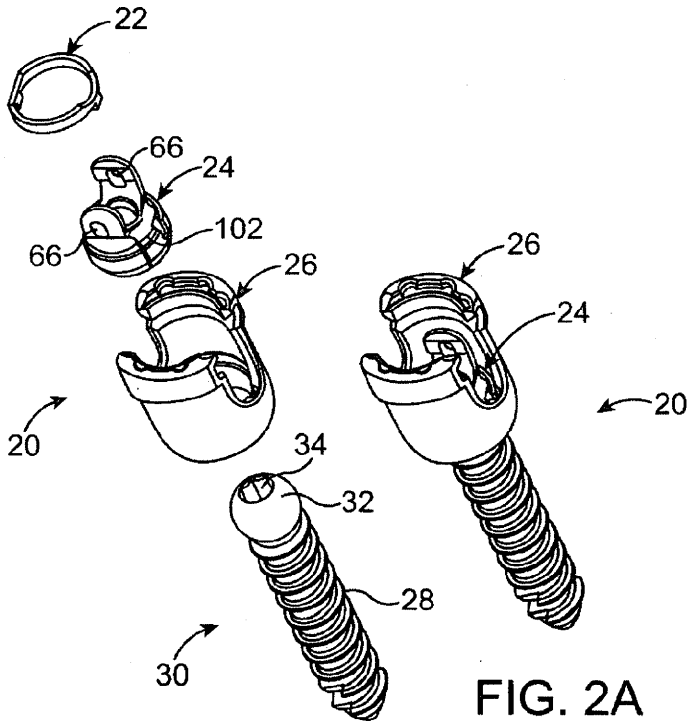

FIG. 2A

(57) Abstract: Methods, systems, devices and tools for placing bone stabilization components in a patient are provided. The systems and devices have a reduced number of discrete components that allow placement through small incisions and tubes. More particularly, the present invention is directed to screws for use in systems and methods of treating the spine, which eliminate pain and enable spinal motion, which effectively mimics that of a normally functioning spine. Methods are also provided for installation of the screw and other subject systems.

WO 2008/115549 A1

EP 2142119 /
WO 2008/115549
2/3

ZW), Eurasian (AM, AZ, BY, KG, KZ, MD, RU, TJ, TM), European (AT, BE, BG, CH, CY, CZ, DE, DK, EE, ES, FI, FR, GB, GR, HR, HU, IE, IS, IT, LT, LU, LV, MC, MT, NL, NO, PL, PT, RO, SE, SI, SK, TR), OAPI (BF, BJ, CF, CG, CI, CM, GA, GN, GQ, GW, ML, MR, NE, SN, TD, TG).

Published:

— *with international search report*

— *before the expiration of the time limit for amending the claims and to be republished in the event of receipt of amendments*

are compatible with other pedicle screw systems and/or spinal implants. Embodiments of the invention may be applicable to patients with degenerative disc disease, spinal stenosis, spondylolisthesis, spinal deformities, fractures, pseudarthrosis, tumors, failed prior fusions, or other vertebral segment trauma and disease.

[0024] It is noted that perfect alignment of the screws with one another is quite difficult and requires great skill on the part of the surgeon to accomplish. Alignment of the screws is even more difficult in minimally invasive/percutaneous procedures. Alignment may further be complicated by the patient's condition such as damaged or diseased bone or other anatomical condition. Screws can be out-of-alignment not only in one plane but in two and in some cases three planes. However, the polyaxial seat of the screw of the present invention advantageously allows the seat to swivel on top of the screw such that they may be lined up regardless of the orientation of the screws' axes and can even thus be made to accommodate a certain amount of misalignment from difference in height once they are inserted into bone. The polyaxial motion of the seat allows the rod channels to be lined-up so that the rod can be placed or attached between the screws without having their axes perfectly aligned to do so. Then the seat can be modified to eliminate motion and stabilize one or more vertebral segments.

[0025] Other advantages will be apparent from the description that follows, including the drawings and claims.

BRIEF DESCRIPTION OF THE DRAWINGS

[0026] The invention is best understood from the following detailed description when read in conjunction with the accompanying drawings. It is emphasized that, according to common practice, the various features of the drawings are not to-scale. On the contrary, the dimensions of the various features are arbitrarily expanded or reduced for clarity. Included in the drawings are the following figures:

EP 2142122 / WO 2008/134264

1/2

(12) INTERNATIONAL APPLICATION PUBLISHED UNDER THE PATENT COOPERATION TREATY (PCT)

(19) World Intellectual Property Organization
International Bureau

(43) International Publication Date
6 November 2008 (06.11.2008)

PCT

= EP 2142122

(10) International Publication Number
WO 2008/134264 A1

(51) International Patent Classification:
A61B 17/80 (2006.01) *A61B 17/84* (2006.01)
A61B 17/72 (2006.01) *A61F 2/00* (2006.01)
A61B 17/68 (2006.01)

(21) International Application Number:
PCT/US2008/060810

(22) International Filing Date: 18 April 2008 (18.04.2008)

(25) Filing Language: English

(26) Publication Language: English

(30) Priority Data:
60/914,482 27 April 2007 (27.04.2007) US

(71) Applicant *(for CA only)*: **SYNTHES (U.S.A.)** [US/US]; 1302 Wrights Lane East, West Chester, Pennsylvania 19380 (US).

(71) Applicant *(for all designated States except CA, US)*: **SYNTHES GMBH** [CH/CH]; Eimattstrasse 3, CH-4436 Oberdorf (CH).

(72) Inventors; and
(75) Inventors/Applicants *(for US only)*: **SIRAVO, Mark** [US/US]; 2917 Sunset Avenue, Norristown, PA 19403 (US). **PIERSON, Glen** [US/US]; 201 Mapleflower Road, Glenmoore, Pennsylvania 19343 (US).

(74) Agents: **KAPLUN, Oleg F.** et al.; 150 Broadway, Suite 702, New York, New York 10038 (US).

(81) Designated States *(unless otherwise indicated, for every kind of national protection available)*: AE, AG, AL, AM, AO, AT, AU, AZ, BA, BB, BG, BH, BR, BW, BY, BZ, CA, CH, CN, CO, CR, CU, CZ, DE, DK, DM, DO, DZ, EC, EE, EG, ES, FI, GB, GD, GE, GH, GM, GT, HN, HR, HU, ID, IL, IN, IS, JP, KE, KG, KM, KN, KP, KR, KZ, LA, LC, LK, LR, LS, LT, LU, LY, MA, MD, ME, MG, MK, MN, MW, MX, MY, MZ, NA, NG, NI, NO, NZ, OM, PG, PH, PL, PT, RO, RS, RU, SC, SD, SE, SG, SK, SL, SM, SV, SY, TJ, TM, TN, TR, TT, TZ, UA, UG, US, UZ, VC, VN, ZA, ZM, ZW.

(84) Designated States *(unless otherwise indicated, for every kind of regional protection available)*: ARIPO (BW, GH, GM, KE, LS, MW, MZ, NA, SD, SL, SZ, TZ, UG, ZM, ZW), Eurasian (AM, AZ, BY, KG, KZ, MD, RU, TJ, TM), European (AT, BE, BG, CH, CY, CZ, DE, DK, EE, ES, FI, FR, GB, GR, HR, HU, IE, IS, IT, LT, LU, LV, MC, MT, NL, NO, PL, PT, RO, SE, SI, SK, TR), OAPI (BF, BJ, CF, CG, CI, CM, GA, GN, GQ, GW, ML, MR, NE, SN, TD, TG).

Published:
— *with international search report*

(54) Title: IMPLANT DEVICES CONSTRUCTED WITH METALLIC AND POLYMERIC COMPONENTS

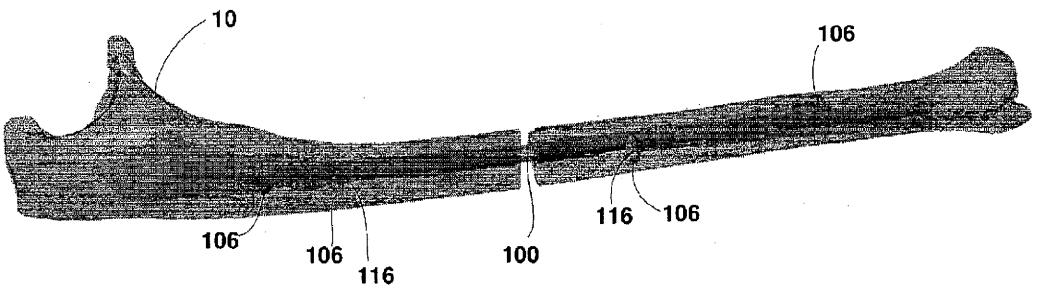

FIG. 1

(57) Abstract: A device for treating bone comprises a rigid body including a polymeric material extending over at least a target portion thereof. The device further comprises a locking element extending into the bone and attached to the device by forming a permanent bond therebetween by melting a portion of an outer surface of the locking element and the polymeric material.

WO 2008/134264 A1

Figure 3 shows a cross-sectional view of a distal tip of the intramedullary nail of Fig. 2;

Figure 4 shows a perspective view of a locking element of the apparatus of Fig. 1;

Figure 5 shows a first perspective view of the fixation apparatus of Fig. 1 partially inserted into the bone;

Figure 6 shows a second perspective view of the fixation apparatus of Fig. 1 partially inserted into the bone and rotated about an axis of the bone relative to Fig. 5;

Figure 7 shows a perspective view of an end cap according to the present invention;

Figure 8 shows a cross-sectional view of a bore for receiving the end cap of Fig. 7;

Figure 9 shows a cross-sectional view of a bone plate according to another exemplary embodiment of the invention;

Figure 10 shows a cross-sectional view of a further embodiment of a bone plate according to the invention;

Figure 11 shows a cross-sectional view of a still further embodiment of a bone plate according to the invention;

Figure 12 shows a cross-sectional view of an additional embodiment of a bone plate according to the invention;

Figure 13 shows a cross-sectional view of an additional embodiment of a bone plate according to the invention; and

Figure 14 shows a perspective view of the bone plate of Figure 13.

Detailed Description

[4] The present invention is directed to devices for stabilizing portions of bone which may be employed either after a fracture or prophylactically to prevent fractures of weakened portions of bone (i.e., due to tumor or disease). A device according to the present invention comprises an implantable device (e.g., an intramedullary or extramedullary nail, bone plate, etc.) including both metallic and polymeric components and adapted to fix portions of bone in a living body. The present invention also teaches locking elements adapted to lock the device to the bone by passing through holes in the device into the bone. Specifically, a device according to the present invention is placed within or on a bone according to methods known in the art and coupled to the

EP 2142123/

WO 2008/115318

1/3

(12) INTERNATIONAL APPLICATION PUBLISHED UNDER THE PATENT COOPERATION TREATY (PCT)

(19) World Intellectual Property Organization
International Bureau

= EP 2142123

(43) International Publication Date
25 September 2008 (25.09.2008)

PCT

(10) International Publication Number
WO 2008/115318 A1

(51) International Patent Classification:
A61B 17/86 (2006.01)

(21) International Application Number:
PCT/US2008/001626

(22) International Filing Date: 7 February 2008 (07.02.2008)

(25) Filing Language: English

(26) Publication Language: English

(30) Priority Data:
11/726,382 21 March 2007 (21.03.2007) US

(71) Applicant *(for all designated States except US)*: **THE UNIVERSITY OF NORTH CAROLINA AT CHAPEL HILL** [US/US]; 308 Bynum Hall, Campus Box 4105, Chapel Hill, NC 27599-4105 (US).

(72) Inventors; and
(75) Inventors/Applicants *(for US only)*: **DAHNERS, Laurence, E.** [US/US]; 184 Azalea Place, Chapel Hill, NC 27514 (US). **WARNER, Nicholas, F.** [US/US]; 118 South Street, Cummington, MA 01026 (US).

(74) Agent: **JENKINS, Richard, E.**; Jenkins, Wilson, Taylor & Hunt, P.A., Suite 1200, University Tower, 3100 Tower Boulevard, Durham, NC 27707 (US).

(81) Designated States *(unless otherwise indicated, for every kind of national protection available)*: AE, AG, AL, AM, AO, AT, AU, AZ, BA, BB, BG, BH, BR, BW, BY, BZ, CA, CH, CN, CO, CR, CU, CZ, DE, DK, DM, DO, DZ, EC, EE, EG, ES, FI, GB, GD, GE, GH, GM, GT, HN, HR, HU, ID, IL, IN, IS, JP, KE, KG, KM, KN, KP, KR, KZ, LA, LC, LK, LR, LS, LT, LU, LY, MA, MD, ME, MG, MK, MN, MW, MX, MY, MZ, NA, NG, NI, NO, NZ, OM, PG, PH, PL, PT, RO, RS, RU, SC, SD, SE, SG, SK, SL, SM, SV, SY, TJ, TM, TN, TR, TT, TZ, UA, UG, US, UZ, VC, VN, ZA, ZM, ZW.

(84) Designated States *(unless otherwise indicated, for every kind of regional protection available)*: ARIPO (BW, GH, GM, KE, LS, MW, MZ, NA, SD, SL, SZ, TZ, UG, ZM, ZW), Eurasian (AM, AZ, BY, KG, KZ, MD, RU, TJ, TM), European (AT, BE, BG, CH, CY, CZ, DE, DK, EE, ES, FI, FR, GB, GR, HR, HU, IE, IS, IT, LT, LU, LV, MC, MT, NL,

[Continued on next page]

(54) Title: ANTI-UNSCREWING AND MULTI-ANGULAR FASTENING APPARATUSES AND METHODS FOR SURGICAL BONE SCREW/PLATE SYSTEMS

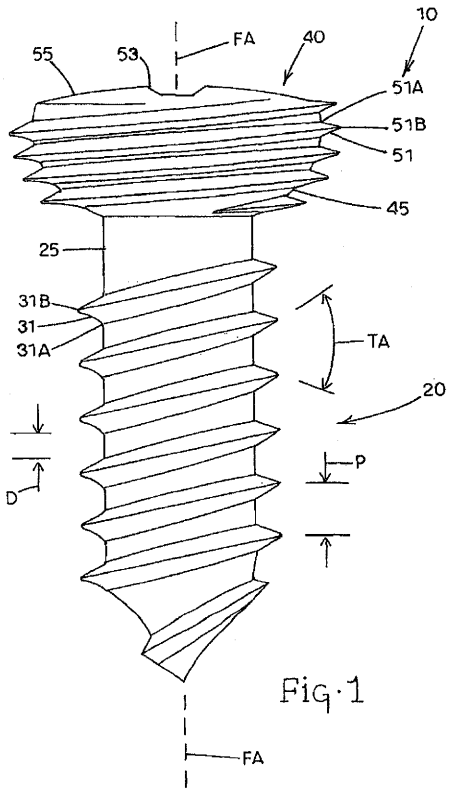

Fig·1

(57) Abstract: A fastening apparatus includes a fastener and a fastener receiving member. The apparatus enables the fastener to be affixed to the fastener receiving member at a variable insertion angle selected by the user and further provides an anti-unscrewing feature. The fastener includes an elongate section and an adjoining head section having at least one slot therein. The fastener receiving member includes one or more apertures having a contact region through which one or more corresponding fasteners can be inserted. The contact region includes a matrix of protrusions having a density and strength sufficient to render contact region tappable by the thread of the head section of the fastener. The thread on the head section is driven into the contact region at the selected insertion angle. As a result, the protrusions project into the at least one slot to prevent the fastener from backing out of the fastener receiving member. A fastener driver is also disclosed.

WO 2008/115318 A1

EP 2142123/
WO 2008/115318
2/3

NO, PL, PT, RO, SE, SI, SK, TR), OAPI (BF, BJ, CF, CG, CI, CM, GA, GN, GQ, GW, ML, MR, NE, SN, TD, TG).

Published:

— *with international search report*

— *before the expiration of the time limit for amending the claims and to be republished in the event of receipt of amendments*

central axis of the aperture, thereby providing significant flexibility in practice. The fastener is designed to include notches or slots that engage the tappable region in an anti-unscrewing manner to prevent the fastener from backing out of the plate. The bone screw/plate also provides a tool that permits removal of a fastener which employs the anti-unscrewing technology.

While it is contemplated that the disclosure can be applied in a wide range of fastening and fixation techniques, particular advantage is found in the field of orthopaedic surgery. Embodiments of the disclosure can be practiced in any surgical procedure that conventionally involves the use of bone screw/plate systems. Examples include the treatment of general bone trauma, stabilization of metaphyseal fractures, treatment of osteoporotic bones, bone fusion, joint prosthesis, spinal alignment or correction, and the like.

According to one embodiment of the present disclosure, a surgical plate adapted for fixation with a bone screw is provided. The plate comprises first and second opposing major surfaces, and an inside surface extending between the first and second major surfaces. The inside surface defines an aperture that is generally coaxially disposed about an aperture axis. A non-threaded tappable contact region is disposed on the inside surface of the aperture. The tappable contact region has a minimum inside diameter that is large enough to permit a bone screw having at least one slot to pass therethrough at an insertion angle defined between a longitudinal axis of the fastener and the aperture axis. The tappable contact region is adapted for being tapped by an external thread of the bone screw to affix the bone screw to the tappable contact region at the insertion angle. The tappable contact region is further adapted to engage the at least one slot of the fastener to prevent backing out of the fastener from the aperture of the plate.

According to one aspect of this embodiment, the fastener has at least one slot for permanently affixing the fastener to the plate. According to another aspect, the fastener has a plurality of slots that facilitate removal of the anti-unscrewing fastener from the plate.

According to a further aspect of this embodiment, a fastener driver comprises slot engagement portions for deflecting protrusions of the tappable

EP 2148624 /
WO 2008/129241
1/3

(12) INTERNATIONAL APPLICATION PUBLISHED UNDER THE PATENT COOPERATION TREATY (PCT)

(19) World Intellectual Property Organization
International Bureau

(43) International Publication Date
30 October 2008 (30.10.2008)

PCT

= EP 2148624

(10) International Publication Number
WO 2008/129241 A1

(51) International Patent Classification:
A61B 17/68 (2006.01)

(21) International Application Number:
PCT/GB2008/001322

(22) International Filing Date: 15 April 2008 (15.04.2008)

(25) Filing Language: English

(26) Publication Language: English

(30) Priority Data:

0707534,4	19 April 2007 (19.04.2007)	GB
0801800.4	1 February 2008 (01.02.2008)	GB
0804648.4	13 March 2008 (13.03.2008)	GB

(71) Applicant *(for all designated States except US)*: **SMITH & NEPHEW PLC** [GB/GB]; 15 Adam Street, London WC2N 6LA (GB).

(72) Inventors; and
(75) Inventors/Applicants *(for US only)*: **MONTES DE OCA BALDERAS, Horacio** [MX/GB]; Smith & Nephew Research Centre, York Science Park, Heslington, York YO10 5DF (GB). **BROWN, Malcolm** [GB/GB]; Smith & Nephew Research Centre, York Science Park, Heslington, York YO10 5DF (GB). **THOMPSON, Andrew** [GB/GB]; Smith & Nephew Research Centre, York Science Park, Heslington, York YO10 5DF (GB). **HOWLING, Graeme** [GB/GB]; Smith & Nephew Research Centre, York Science Park, Heslington, York YO10 5DF (GB).

(74) Agent: **CONNORS, Martin**; Smith & Nephew Research Centre, York Science Park, Heslington, York YO10 5DF (GB).

(81) Designated States *(unless otherwise indicated, for every kind of national protection available)*: AE, AG, AL, AM, AO, AT, AU, AZ, BA, BB, BG, BH, BR, BW, BY, BZ, CA, CH, CN, CO, CR, CU, CZ, DE, DK, DM, DO, DZ, EC, EE, EG, ES, FI, GB, GD, GE, GH, GM, GT, HN, HR, HU, ID, IL, IN, IS, JP, KE, KG, KM, KN, KP, KR, KZ, LA, LC, LK, LR, LS, LT, LU, LY, MA, MD, ME, MG, MK, MN, MW, MX, MY, MZ, NA, NG, NI, NO, NZ, OM, PG, PH, PL, PT, RO, RS, RU, SC, SD, SE, SG, SK, SL, SM, SV, SY, TJ, TM, TN, TR, TT, TZ, UA, UG, US, UZ, VC, VN, ZA, ZM, ZW.

(84) Designated States *(unless otherwise indicated, for every kind of regional protection available)*: ARIPO (BW, GH, GM, KE, LS, MW, MZ, NA, SD, SL, SZ, TZ, UG, ZM, ZW), Eurasian (AM, AZ, BY, KG, KZ, MD, RU, TJ, TM), European (AT, BE, BG, CH, CY, CZ, DE, DK, EE, ES, FI, FR, GB, GR, HR, HU, IE, IS, IT, LT, LU, LV, MC, MT, NL, NO, PL, PT, RO, SE, SI, SK, TR), OAPI (BF, BJ, CF, CG, CI, CM, GA, GN, GQ, GW, ML, MR, NE, SN, TD, TG).

Published:
— *with international search report*

(54) Title: FIXATION DEVICE

FIG. 1B

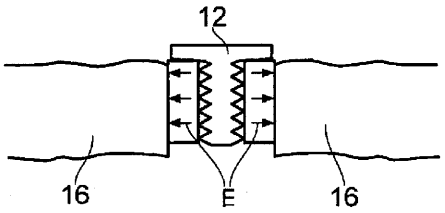

(57) Abstract: The present invention relates to a fixation device and in particular to a device which aids anchoring of orthopaedic fasteners and implants to bone. The invention also relates to a fixation apparatus and a method of fixation.

WO 2008/129241 A1

EP 2148624 / WO 2008/129241

2/3

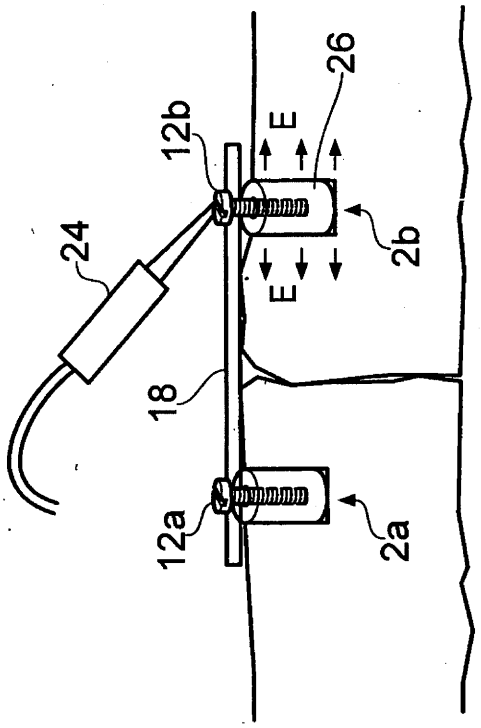

FIG. 8D

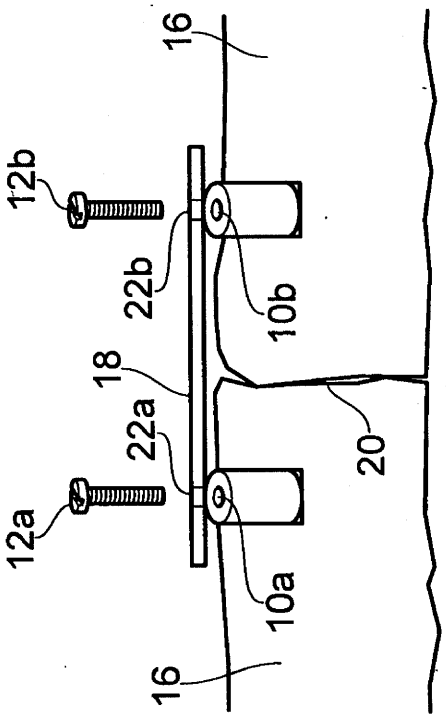

FIG. 8C

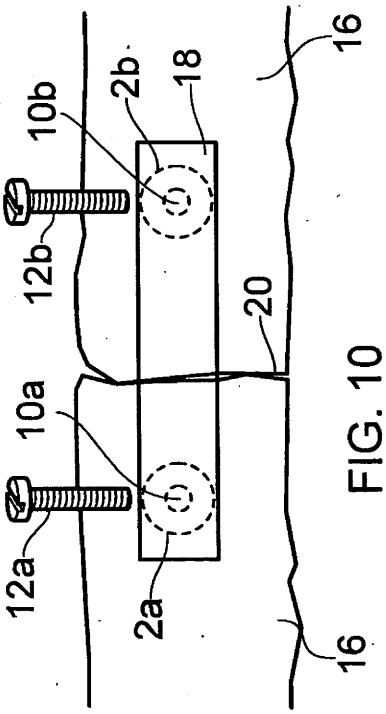

FIG. 10

EP 2148624 / WO 2008/129241

3/3

Alternatively, the screw can be of a non-metallic material, for example, PEEK or PE. The screw may also be of a SMP material which may be the same or different from the SMP material of the plug. Preferably, the SMP material of the plug and fastener are different. In this way, the plug and fastener will relax at different rates, which increases the frictional stresses between the expanding fastener and plug thus improving the anchoring effect of the fastener within the passage of the plug.

Preferably, the fixation apparatus comprises more than one plug and fastener. Preferably, the fixation apparatus includes a support member for placing over the fractured site so that the support member bridges the fracture. Preferably, the support member is a plate. The plate can be substantially flat or configured to accommodate the shape of bone to which it is attached. The plate may include holes for receiving the fasteners or may have a suitable number of holes formed therein prior to use. In use, the plate is anchored to the bone using a number of fasteners and plugs. The combination of plate, fasteners and plugs provides a way of locating, realigning and supporting the bone about the fracture to aid healing.

Therefore, according to a third aspect of the invention there is provided a method of bone fixation for repairing fractures comprising the steps of:-

forming cavities in the bone adjacent the fracture;

locating the fixation apparatus to the fractured area; and

expanding the plugs within the cavities thus anchoring the fixation apparatus to the bone.

Typically, the cavities are formed using a conventional surgical drill and are of a generally cylindrical shape mirroring the shape of a conventional drill bit. However, the cavity can be of any suitable shape; the plug being capable of expansion to fill the cavity regardless of its shape. For example, the cavity can have a square, elliptical or hexagonal cross section; the noncircular nature of the cavity further inhibiting rotational movement of the plug and thus slippage within the cavity.

EP 2151207

1/3

(19) Europäisches Patentamt
European Patent Office
Office européen des brevets

(11) EP 2 151 207 A2

(12) **EUROPÄISCHE PATENTANMELDUNG**

(43) Veröffentlichungstag:
10.02.2010 Patentblatt 2010/06

(51) Int Cl.:
A61B 17/68 *(2006.01)*

(21) Anmeldenummer: **09014615.0**

(22) Anmeldetag: **13.04.2005**

(84) Benannte Vertragsstaaten:
CH DE ES FR GB IT LI

(30) Priorität: **16.04.2004 DE 102004018621**
16.04.2004 US 563241 P

(62) Dokumentnummer(n) der früheren Anmeldung(en) nach Art. 76 EPÜ:
05008060.5 / 1 586 276

(71) Anmelder: **Biedermann Motech GmbH**
78054 VS-Schwenningen (DE)

(72) Erfinder:
- **Harms, Jürgen**
76227 Karlsruhe (DE)
- **Biedermann, Lutz**
78048 VS-Villingen (DE)
- **Matthis, Wilfried**
79367 Weisweil (DE)

(74) Vertreter: **Prüfer & Partner GbR**
European Patent Attorneys
Sohnckestrasse 12
81479 München (DE)

Bemerkungen:
Diese Anmeldung ist am 24-11-2009 als Teilanmeldung zu der unter INID-Code 62 erwähnten Anmeldung eingereicht worden.

(54) **Elastisches Element zur Verwendung in einer Stabilisierungseinrichtung für Knochen und Herstellungsverfahren für ein solches elastisches Element**

(57) Es wird ein elastisches Element (20) mit hoher Biegesteifigkeit bei geringer Baulänge zur Verwendung in einer Stabilisierungseinrichtung (100) für Knochen oder Wirbel bereitgestellt. Das elastische Element (20) ist als ein im wesentlichen zylindrischer Körper ausgebildet, wobei ein aus mindestens zwei koaxialen Schraubenfedern bestehender elastischer Abschnitt vorgesehen ist. Die Windungen der Schraubenfedern weisen alle die gleiche Steigung (α) auf und sind so angeordnet, dass die Windungen (3) der einen Schraubenfeder zumindest in einem Abschnitt zwischen den Windungen (4) der anderen Schraubenfeder verlaufen. Ferner weist das elastische Element keine Bohrung auf, die sich ansonsten entlang der Mittenachse M des Elements hätte erstrekken können. Das so ausgebildete elastische Element (20) kann Teil einer Knochenschraube (60,80,101,101'), eines Stabförmigen Elementes (50) oder anderer bei einer Stabilisierungseinrichtung (100) verwendeter Elemente sein.

Fig. 4a

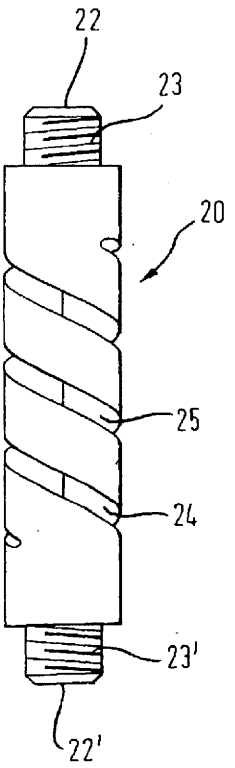

EP 2 151 207 A2

Fig. 9

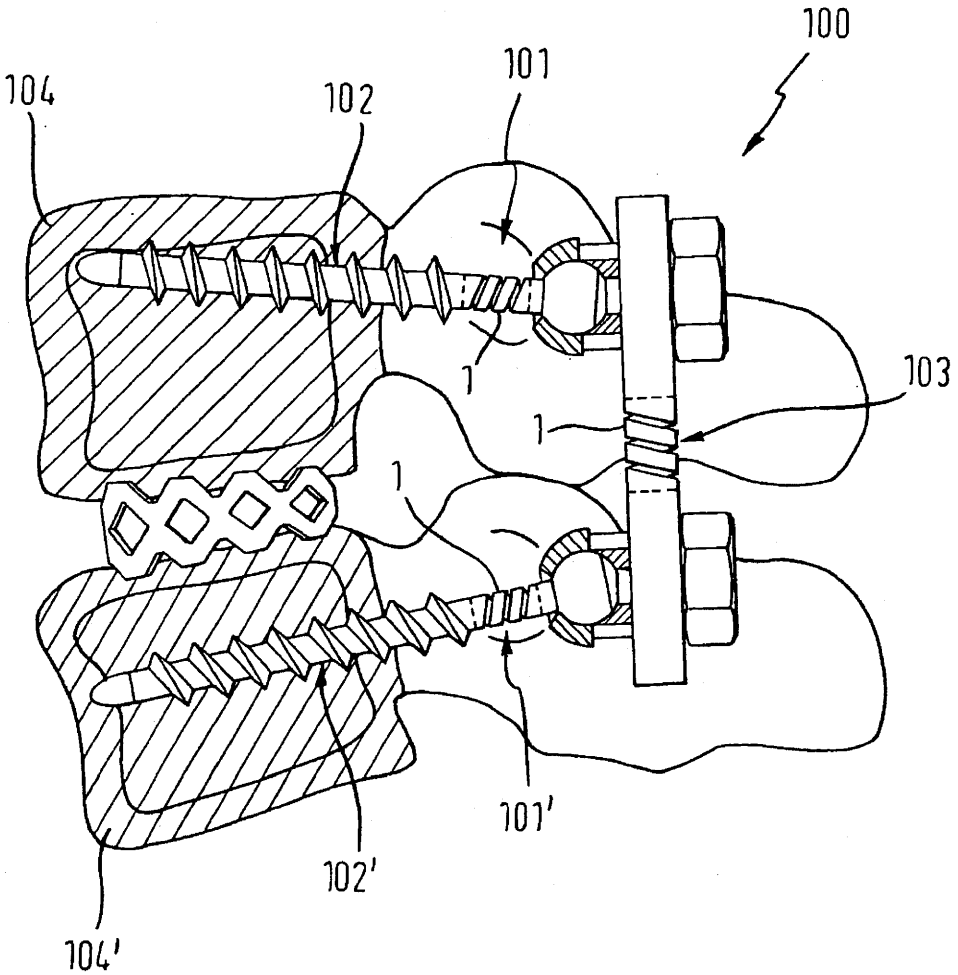

Beschreibung

[0001] Die Erfindung betrifft ein elastisches Element für die Verwendung in der Wirbelsäulen- oder Unfallchirurgie, ein Knochenverankerungselement, ein stabförmiges Element und eine Stabilisierungseinrichtung jeweils mit einem solchen elastischen Element, sowie ein Herstellungsverfahren für ein solches elastisches Element.

[0002] Zur Fixierung von Knochenfrakturen oder zur Stabilisierung der Wirbelsäule sind Fixations- und Stabilisierungseinrichtungen bekannt, die aus wenigstens zwei im Knochen bzw. Wirbel verankerten und über eine Platte oder über einem Stab verbundenen Knochenschrauben bestehen. Derartige starre Systeme erlauben keine Bewegung der relativ zueinander fixierten Knochenteile oder Wirbel.

[0003] Für bestimmte Indikationen ist jedoch eine dynamische Stabilisierung wünschenswert, bei der die zu stabilisierenden Knochenteile und Wirbel eine kontrollierte begrenzte Bewegung zu einander ausführen können. Eine Möglichkeit für die Realisierung der dynamischen Stabilisierungseinrichtung besteht in der Verwendung eines elastischen Elementes anstelle eines die Knochenverankerungselemente verbindenden starren Stabes.

[0004] Aus der US 2003/0109880 A1 ist eine dynamische Stabilisierungseinrichtung für Wirbel bekannt, die eine erste und eine zweite im Wirbel zu verankernde Schraube jeweils mit einem Aufnahmeteil zum Einlegen einer die Schrauben verbindenden Feder und eine solche Feder umfaßt. Die Feder selbst ist als Ganzes in Form einer Schraubenfeder mit dicht benachbarten Windungen nach Art einer Zugfeder ausgebildet und wird über Klemmschrauben in den Aufnahmeteilen fixiert. Es besteht hierbei jedoch die Gefahr, dass die Feder auf Grund ihrer Elastizität dem Druck der Klemmschraube ausweicht und somit die Fixierung zwischen der Knochenschraube und der Feder gelockert wird. Ein weiterer Nachteil der Vorrichtung besteht darin, dass die Elastizität der Feder bei ansonsten gleichen Federeigenschaften von der Länge der Feder abhängt. Ferner ist die Biegesteifigkeit der Feder insbesondere bei kurzen Baulängen relativ gering.

[0005] Aus der US 6,162,223 ist eine Fixationseinrichtung für ein Gelenk, z.B. für ein Handgelenk oder ein Kniegelenk, bekannt, bei der ein an seinen Enden mit Knochenverankerungselementen verbundener Fixationsstab zweiteilig ausgebildet ist, wobei die zwei Teile des Fixationsstabs über ein flexibles Kupplungsteil miteinander verbunden sind und wobei die Fixationsstäbe um das Kupplungsteil außerhalb des Körpers angebracht sind. Die beiden Teile des Fixationsstabs sind mit dem Kupplungsteil nicht fest verbunden, sondern können sich entlang einer Bohrung in dem Kupplungsteil frei bewegen. Der Durchmesser des Kupplungsteil ist auf Grund der Art der Verbindung mit dem zweiteiligen Fixationsstab immer größer als der Durchmesser des Fixationsstabs. Diese bekannte Fixationseinrichtung ist auf Grund ihres komplizierten und voluminösen Aufbaus zum körperinternen Einsatz an der Wirbelsäule oder anderen Knochen nicht geeignet. Insbesondere die Realisierung eines solchen flexiblen Kupplungsteils mit hoher Biegesteifigkeit erfordert ein großes Bauvolumen.

[0006] Es ist Aufgabe der Erfindung, ein elastisches Element bereit zu stellen, das eine hohe Biegesteifigkeit bei geringer Baulänge hat, sowie leicht zu handhaben ist bei gleichzeitig hoher Sicherheit im Einsatz, und welches mit anderen Elementen in möglichst vielfältiger Weise zu einer dynamischen Stabilisierungseinrichtung für Wirbel oder Knochen kombiniert werden kann. Ferner ist es Aufgabe der Erfindung, ein Herstellungsverfahren für das elastische Element bereit zu stellen.

[0007] Die Aufgabe wird gelöst durch ein elastisches Element nach dem Patentanspruch 1 und ein Verfahren zum Herstellen eines solchen elastischen Elements nach dem Patentanspruch 15.

[0008] Weiterbildungen der Erfindung sind in den Unteransprüchen angegeben.

[0009] Die Erfindung weist den Vorteil auf, dass ein elastisches Element zugleich kompakt und mit hoher Biegesteifigkeit ausgebildet ist. Dies ist insbesondere für Anwendungen an der Wirbelsäule und dort insbesondere an der Halswirbelsäule von Bedeutung, wo der zu Verfügung stehende Platz im Vergleich zu Anwendungen an der Lendenwirbelsäule deutlich geringer ist.

[0010] Ferner weist die Erfindung den Vorteil auf, dass ein elastisches Element wahlweise mit starren stabförmigen Elementen verschiedener Länge zu einem elastischen stabförmigen Element kombinierbar ist oder mit verschiedenen Schäften und/oder Köpfen zu einer Knochenschraube mit elastischen Eigenschaften kombinierbar ist. Das elastische stabförmige Element bzw. die Knochenschraube weisen dann in Abhängigkeit von dem verwendetem elastischen Element vorgegebene elastische Eigenschaften wie eine bestimmte Kompressions- und Extensionsfähigkeit in axialer Richtung, sowie eine bestimmte Biege- und Torsionssteifigkeit auf.

[0011] Insbesondere kann das elastisches Element mit stabförmigen Bauteilen verschiedener Dicke oder mit in der Wirbelsäulen- und/oder Unfallchirurgie zu verwendenden Platten unterschiedlicher Form und Länge verbunden werden.

[0012] Weitere Merkmale und Zweckmäßigkeiten ergeben sich aus der Beschreibung von Ausführungsbeispielen anhand der Figuren.

[0013] Von den Figuren zeigen:

Fig. 1 ein elastisches Element mit einer Doppelschraubenfeder nach einer ersten Ausführungsform der Erfindung;

Fig. 2 eine schematische Darstellung der Doppelschraubenfeder des elastischen Elements aus Fig. 1 einmal als Ganzes (Fig. 2a) und in Explosionsdarstellung (Fig. 2b);

(12) INTERNATIONAL APPLICATION PUBLISHED UNDER THE PATENT COOPERATION TREATY (PCT)

(19) World Intellectual Property Organization
International Bureau

(43) International Publication Date
13 November 2008 (13.11.2008)

PCT

= EP 2152141

(10) International Publication Number
WO 2008/135798 A1

(51) International Patent Classification:
A61B 1/317 (2006.01) *A61B 8/04* (2006.01)
A61B 5/026 (2006.01)

(21) International Application Number:
PCT/HU2008/000042

(22) International Filing Date: 29 April 2008 (29.04.2008)

(25) Filing Language: English

(26) Publication Language: English

(30) Priority Data:
60/915,885 3 May 2007 (03.05.2007) US

(71) Applicant and
(72) Inventor: **NYÁRÁDY, József** [HU/HU]; Akác u. 1., H-7632 Pécs (HU).

(74) Agent: **DANUBIA PATENT & LAW OFFICE LLC**; Bajcsy-Zsilinszky út 16., H-1051 Budapest (HU).

(81) Designated States *(unless otherwise indicated, for every kind of national protection available)*: AE, AG, AL, AM, AO, AT, AU, AZ, BA, BB, BG, BH, BR, BW, BY, BZ, CA, CH, CN, CO, CR, CU, CZ, DE, DK, DM, DO, DZ, EC, EE, EG, ES, FI, GB, GD, GE, GH, GM, GT, HN, HR, HU, ID, IL, IN, IS, JP, KE, KG, KM, KN, KP, KR, KZ, LA, LC, LK, LR, LS, LT, LU, LY, MA, MD, ME, MG, MK, MN, MW, MX, MY, MZ, NA, NG, NI, NO, NZ, OM, PG, PH, PL, PT, RO, RS, RU, SC, SD, SE, SG, SK, SL, SM, SV, SY, TJ, TM, TN, TR, TT, TZ, UA, UG, US, UZ, VC, VN, ZA, ZM, ZW.

(84) Designated States *(unless otherwise indicated, for every kind of regional protection available)*: ARIPO (BW, GH, GM, KE, LS, MW, MZ, NA, SD, SL, SZ, TZ, UG, ZM, ZW), Eurasian (AM, AZ, BY, KG, KZ, MD, RU, TJ, TM), European (AT, BE, BG, CH, CY, CZ, DE, DK, EE, ES, FI, FR, GB, GR, HR, HU, IE, IS, IT, LT, LU, LV, MC, MT, NL, NO, PL, PT, RO, SE, SI, SK, TR), OAPI (BF, BJ, CF, CG, CI, CM, GA, GN, GQ, GW, ML, MR, NE, SN, TD, TG).

Published:
— *with international search report*
— *before the expiration of the time limit for amending the claims and to be republished in the event of receipt of amendments*

(54) Title: METHOD AND DEVICE FOR MEASURING BLOOD FLOW IN THE BONE AFTER A FRACTURE

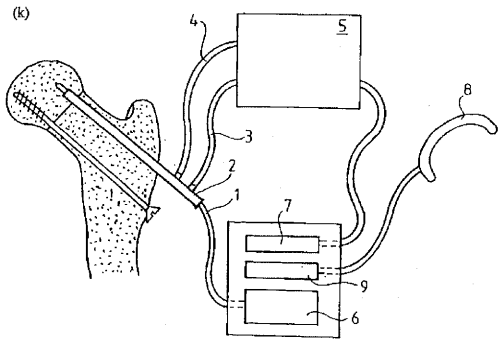

FIGURE 5K

(57) Abstract: The invention relates to a method and device for measuring blood flow in the bone after a fracture, mainly femoral neck fracture, wherein a hole is drilled into the bone, preferably through the neck of the femur into the head of the femur. The method includes the steps of inserting the metal sleeve of an osteoscope into the hole; inserting the optics of an osteoscope is inserted into the metal sleeve and focused on the cavity created by the drill; filling the device and the cavity with a physiological solution such that the pressure of the solution is above the systolic blood pressure; decreasing the pressure of the solution while observing the cavity through the osteoscope, and recording the pressure in the system at the commencement of bleeding. The device includes a metal sleeve (2) of an osteoscope to be inserted into a bore drilled in the fractured bone; an optics (1) of an osteoscope to be inserted into said metal sleeve (2) and connected to a visual display (6) of the osteoscope; a reservoir (5) with physiological solution connected to the metal sleeve (2); means for controlling the pressure of the solution; a manometer for monitoring the pressure of the solution; and manometer for measuring the blood pressure of the patient.

WO 2008/135798 A1

(19) Europäisches Patentamt
European Patent Office
Office européen des brevets

(11) EP 2 153 787 A1

(12) **EUROPÄISCHE PATENTANMELDUNG**

(43) Veröffentlichungstag:
17.02.2010 Patentblatt 2010/07

(51) Int Cl.:
A61B 17/80 (2006.01)

(21) Anmeldenummer: **09008864.2**

(22) Anmeldetag: **07.07.2009**

(84) Benannte Vertragsstaaten:
AT BE BG CH CY CZ DE DK EE ES FI FR GB GR HR HU IE IS IT LI LT LU LV MC MK MT NL NO PL PT RO SE SI SK SM TR
Benannte Erstreckungsstaaten:
AL BA RS

(30) Priorität: **11.08.2008 DE 102008037204**

(71) Anmelder: **Buck, Alfred Ernst**
71149 Bondorf (DE)

(72) Erfinder: **Buck, Alfred Ernst**
71149 Bondorf (DE)

(74) Vertreter: **Herden, Andreas F.**
Alexandrastrasse 5
65187 Wiesbaden (DE)

(54) **Platte zur Fixierung von Knochenfragmenten**

(57) Die Erfindung betrifft eine Platte zur Fixierung von Knochenfragmenten, wobei die Platte aus einem gepressten Formkörper aus Draht besteht, vorzugsweise einem gepressten Gestrick.

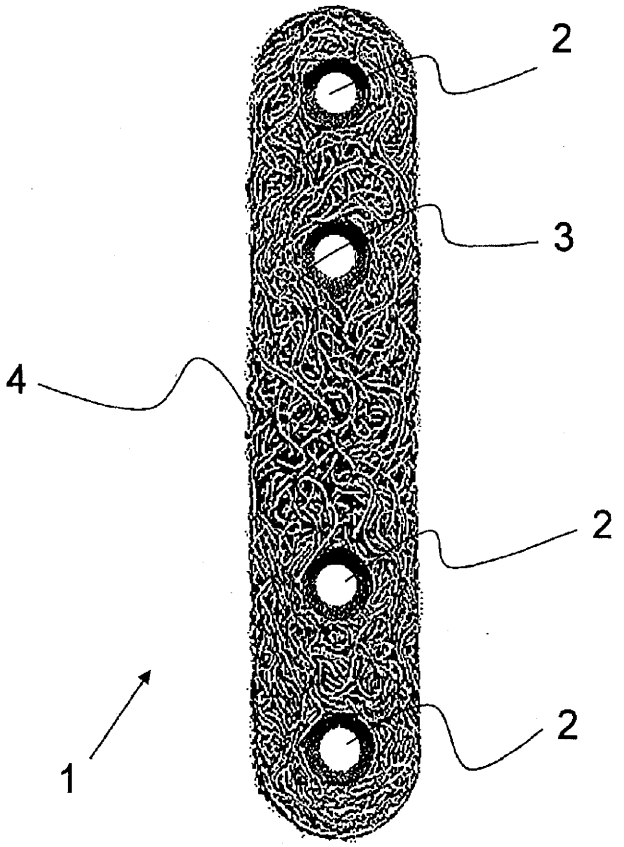

Fig. 1

EP 2 153 787 A1

EP 2156799

1/2

(19) Europäisches Patentamt
European Patent Office
Office européen des brevets

(11) EP 2 156 799 A2

(12) DEMANDE DE BREVET EUROPEEN

(43) Date de publication:
24.02.2010 Bulletin 2010/08

(51) Int Cl.:
A61B 17/86 (2006.01)

(21) Numéro de dépôt: **09002928.1**

(22) Date de dépôt: **02.07.2003**

(84) Etats contractants désignés:
AT BE BG CH CY CZ DE DK EE ES FI FR GB GR HU IE IT LI LU MC NL PT RO SE SI SK TR

(30) Priorité: **05.07.2002 FR 0208589**

(62) Numéro(s) de document de la (des) demande(s) initiale(s) en application de l'article 76 CBE:
03356101.0 / 1 378 205

(27) Demande déposée antérieurement:
02.07.2003 EP 03356101

(71) Demandeur: **Newdeal S.A.S**
69006 Lyon (FR)

(72) Inventeurs:
- **Fourcault, Eric Stéphane**
69004 Lyon (FR)
- **Giet, Jean-Christophe, Alain**
69006 Lyon (FR)
- **Knevels, Theo, Jan. Maria**
1850 Grimbergen (BE)
- **Gauneau, Bertrand, Xavier, François**
69006 Lyon (FR)

(74) Mandataire: **Martin, Didier Roland Valéry et al**
Cabinet Didier Martin
50, chemin des Verrières
69260 Charbonnières-les Bains (FR)

Remarques:
Cette demande a été déposée le 02.03.09 comme demande divisionnaire de la demande mentionnée sous le code INID 62.

(54) Vis d 'osteosynthese et de compression auto-taraudante et auto-forante

(57) - Vis d'ostéosynthèse et de compression auto-taraudante et auto-forante.
- L'invention concerne une vis d'ostéosynthèse et de compression formée par un corps longitudinal comprenant :
- une partie proximale (2) formée par une tête de vis (3) pourvue d'un filetage (4), ladite partie proximale (2) étant d'un diamètre supérieur à celui du reste de la vis,
- une partie intermédiaire (5) dépourvue de filetage,
- une partie distale (6) pourvue d'un filetage (7),
- une paire de gorges (10) présentes au niveau de la partie distale (6) et de la partie proximale (2),

la gorge (10) présente au niveau de la partie distale (6) étant de forme hélicoïdale, la zone terminale (8) de la partie distale (6) étant pourvue de moyens de préparation (11) dans les fragments d'os d'un logement destiné à recevoir les parties intermédiaire (5) et distale (6), comprenant au moins une dent (11A).
- Vis d'ostéosynthèse à compression.

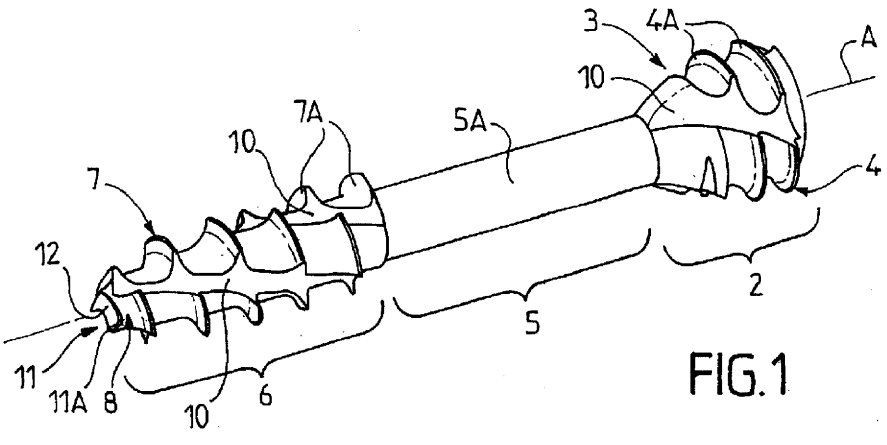

FIG.1

EP 2 156 799 A2

Description

[0001] La présente invention se rapporte au domaine technique des vis chirurgicales, en particulier aux vis d'ostéosynthèse destinées à assurer la solidarisation et la compression de deux fragments d'os en vue de réaliser une ostéosynthèse rapide avec formation d'un cal osseux, la présente invention s'appliquant plus particulièrement à la solidarisation de petits fragments d'os tels que ceux des phalanges d'orteils ou de doigts.

[0002] La présente invention concerne une vis d'ostéosynthèse et de compression destinée à la coaptation de petits fragments d'os, formée par un corps longitudinal unique comprenant :

- une partie proximale formée par une tête de vis pourvue d'un filetage externe, ladite partie proximale étant d'un diamètre supérieur à celui du reste de la vis,
- une partie intermédiaire dépourvue de filetage,
- une partie distale pourvue d'un filetage externe.

[0003] Lors de la rupture de fragments d'os de taille réduite, tels que ceux de phalanges ou d'orteils, la petite dimension des os ou fragments d'os concernée pose des problèmes délicats à résoudre au praticien chargé de réduire la fracture puis de remettre en place les os avec suffisamment de compression pour assurer une bonne résorption de la fracture.

[0004] En effet, on sait que pour assurer une ostéosynthèse rapide des deux fragments d'os entre eux, se concrétisant par la formation rapide d'un cal osseux de bonne qualité afin de permettre un retour rapide à une fonction normale, la mise en place et fixation relative des deux petits fragments d'os doit être réalisée avec une compression longitudinale relative des deux fragments d'os.

[0005] Il est bien évident que compte-tenu de la très faible dimension des fragments d'os impliqués, et corrélativement des vis d'ostéosynthèse utilisées, la mise en compression longitudinale des deux fragments d'os concernés est difficile à réaliser.

[0006] La maîtrise de ce type d'intervention chirurgicale est de plus particulièrement importante et délicate, dans la mesure où les manipulations imposées par la petite taille des os et des vis sont difficiles, alors que le positionnement relatif des petits fragments d'os entre eux ainsi que leur compression et mise en place définitive doivent être réalisés avec une grande précision s'agissant, dans le cas d'os de la main et du pied en particulier, de restaurer la totalité des fonctions de mobilité, telles que les fonctions de manipulation ou de marche.

[0007] C'est ainsi que l'on connaît déjà l'utilisation d'agrafes mises en place directement sur les deux fragments d'os à solidariser. Une telle technique est assez mal adaptée au type d'intervention chirurgicale considérée, dans la mesure où la mise en place des agrafes relativement aux parties osseuses ne permet pas d'assurer une position parfaite des fragments d'os à solidariser. De plus, il est pratiquement impossible d'obtenir une fixation en compression avec des agrafes.

[0008] C'est ainsi qu'il a déjà été proposé d'utiliser des vis d'ostéosynthèse du genre de celles utilisées pour la coaptation d'os de dimension importante et qui soient à même d'assurer, en plus de la solidarisation des os, une fonction supplémentaire de mise en compression longitudinale.

[0009] Ainsi, il a déjà été proposé d'utiliser une vis d'ostéosynthèse et de compression comprenant une partie proximale formée par une tête de vis pourvue d'un filetage externe, et présentant un diamètre supérieur au reste de la vis. Cette vis présente une partie intermédiaire dépourvue de filetage afin d'assurer un glissement relatif amélioré des fragments d'os à solidariser lors du vissage de la vis, ladite partie intermédiaire se poursuivant par une partie distale pourvue elle aussi d'un filetage externe.

[0010] De telles vis améliorent grandement les conditions d'intervention chirurgicale, en raison de l'amélioration des facilités de mise en place qu'elles procurent.

[0011] Néanmoins, de telles vis souffrent toujours d'inconvénients liés en particulier à un certain nombre d'opérations supplémentaires imposées au chirurgien telles que la réalisation de forage préalable pour assurer une bonne tenue mécanique des filets de la vis à la fois pour la partie distale et pour la partie proximale dont le diamètre de tête est supérieur. Ceci multiplie donc les opérations imposées au chirurgien et augmente la durée d'intervention.

[0012] Des améliorations notables ont été apportées à ce type de vis mais elles ont essentiellement porté sur l'augmentation des capacités de compression de ces vis, par exemple par l'incorporation d'un double filet distal, sans pour autant s'attacher au temps global de l'intervention chirurgicale tout en conservant d'excellentes propriétés de compression et de tenue mécanique.

[0013] On connaît également les vis classiques chirurgicales auto-perforantes et auto-taraudantes, la partie taraudante de ces vis connues étant néanmoins limitée à la partie distale de la vis. En effet, les vis connues de l'art antérieur possèdent une tête de vis non filetée que l'on doit précisément enfouir également dans l'os en réalisant un chambrage préalable adapté à l'aide d'un outil spécifique. Ces vis nécessitent donc l'utilisation d'un outil supplémentaire, ce qui implique une opération additionnelle conduisant à un nombre de manipulations accrues, à un risque supplémentaire d'incidents ou de mise en place défectueuse, ce qui au total se traduit par un allongement de l'intervention chirurgicale.

[0014] La présente invention vise en conséquence à porter remède aux différents inconvénients énumérés précédemment et à proposer une nouvelle vis d'ostéosynthèse et de compression destinée à la coaptation de petits fragments d'os, qui soit auto-perforante et auto-taraudante de manière à simplifier et maîtriser au mieux

Patent applications

Worldwide-PCT procedure

WO 2010/002322

1/2

(12) INTERNATIONAL APPLICATION PUBLISHED UNDER THE PATENT COOPERATION TREATY (PCT)

(19) World Intellectual Property Organization
International Bureau

(43) International Publication Date
7 January 2010 (07.01.2010)

PCT

(10) International Publication Number
WO 2010/002322 A1

(51) International Patent Classification:
A61B 17/80 (2006.01) *A61B 17/68* (2006.01)

(21) International Application Number:
PCT/SE2009/050646

(22) International Filing Date:
2 June 2009 (02.06.2009)

(25) Filing Language: Swedish

(26) Publication Language: English

(30) Priority Data:
0801558-8 1 July 2008 (01.07.2008) SE

(71) Applicant *(for all designated States except US)*: **SWEMAC INNOVATION AB** [SE/SE]; Industrigatan 11, S-582 77 Linköping (SE).

(72) Inventor; and
(75) Inventor/Applicant *(for US only)*: **HANSSON, Henrik** [SE/SE]; Eriksberg, S-590 77 Vreta Kloster (SE).

(74) Agent: **ZACCO SWEDEN AB**; P.O. Box 23101, Sveavägen 151, S-104 35 Stockholm (SE).

(81) Designated States *(unless otherwise indicated, for every kind of national protection available)*: AE, AG, AL, AM, AO, AT, AU, AZ, BA, BB, BG, BH, BR, BW, BY, BZ, CA, CH, CL, CN, CO, CR, CU, CZ, DE, DK, DM, DO, DZ, EC, EE, EG, ES, FI, GB, GD, GE, GH, GM, GT, HN, HR, HU, ID, IL, IN, IS, JP, KE, KG, KM, KN, KP, KR, KZ, LA, LC, LK, LR, LS, LT, LU, LY, MA, MD, ME, MG, MK, MN, MW, MX, MY, MZ, NA, NG, NI, NO, NZ, OM, PG, PH, PL, PT, RO, RS, RU, SC, SD, SE, SG, SK, SL, SM, ST, SV, SY, TJ, TM, TN, TR, TT, TZ, UA, UG, US, UZ, VC, VN, ZA, ZM, ZW.

(84) Designated States *(unless otherwise indicated, for every kind of regional protection available)*: ARIPO (BW, GH, GM, KE, LS, MW, MZ, NA, SD, SL, SZ, TZ, UG, ZM, ZW), Eurasian (AM, AZ, BY, KG, KZ, MD, RU, TJ, TM), European (AT, BE, BG, CH, CY, CZ, DE, DK, EE, ES, FI, FR, GB, GR, HR, HU, IE, IS, IT, LT, LU, LV, MC, MK, MT, NL, NO, PL, PT, RO, SE, SI, SK, TR), OAPI (BF, BJ, CF, CG, CI, CM, GA, GN, GQ, GW, ML, MR, NE, SN, TD, TG).

Published:

— *with international search report (Art. 21(3))*

(54) Title: FIXATION SYSTEM

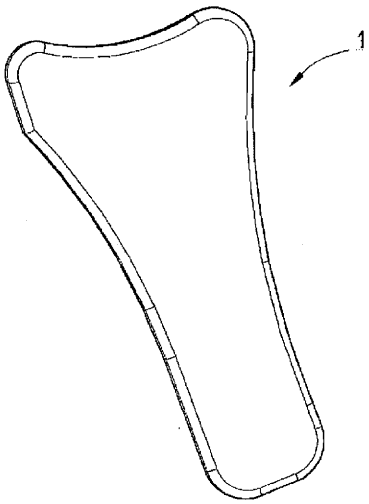

Fig. 1

(57) Abstract: The present invention relates to a system for internal fixation of bone fragments (4a, 4b) in a fracture (3) or of bones in a bone structure, which system comprises a plate (1) and at least two fixing elements (2) which can be screwed into the plate. With the object of providing a fixation system which affords largely unlimited freedom of choice as to where fixing elements may be screwed into the plate, the plate (1) is adapted to being applied abutting against bone fragments (4a, 4b) in the fracture (3) or against bones in the bone structure and is made of a material which can be shaped to the bone fragments or bones against which the plate is intended to abut. The material of the plate (1) is UHMWPE (ultra high molecular weight polyethylene) with an elasticity which makes it possible to screw fixing elements in the form of screws (2) in at any desired locations in the plate in such a way that the screws are locked in the plate by friction with respect to movements in axial, rotary and angular directions. Screwing the screws (2) into bone fragments (4a, 4b) in the fracture (3) or into bones in the bone structure results in fixation of said bone fragments or bones.

WO 2010/002322 A1

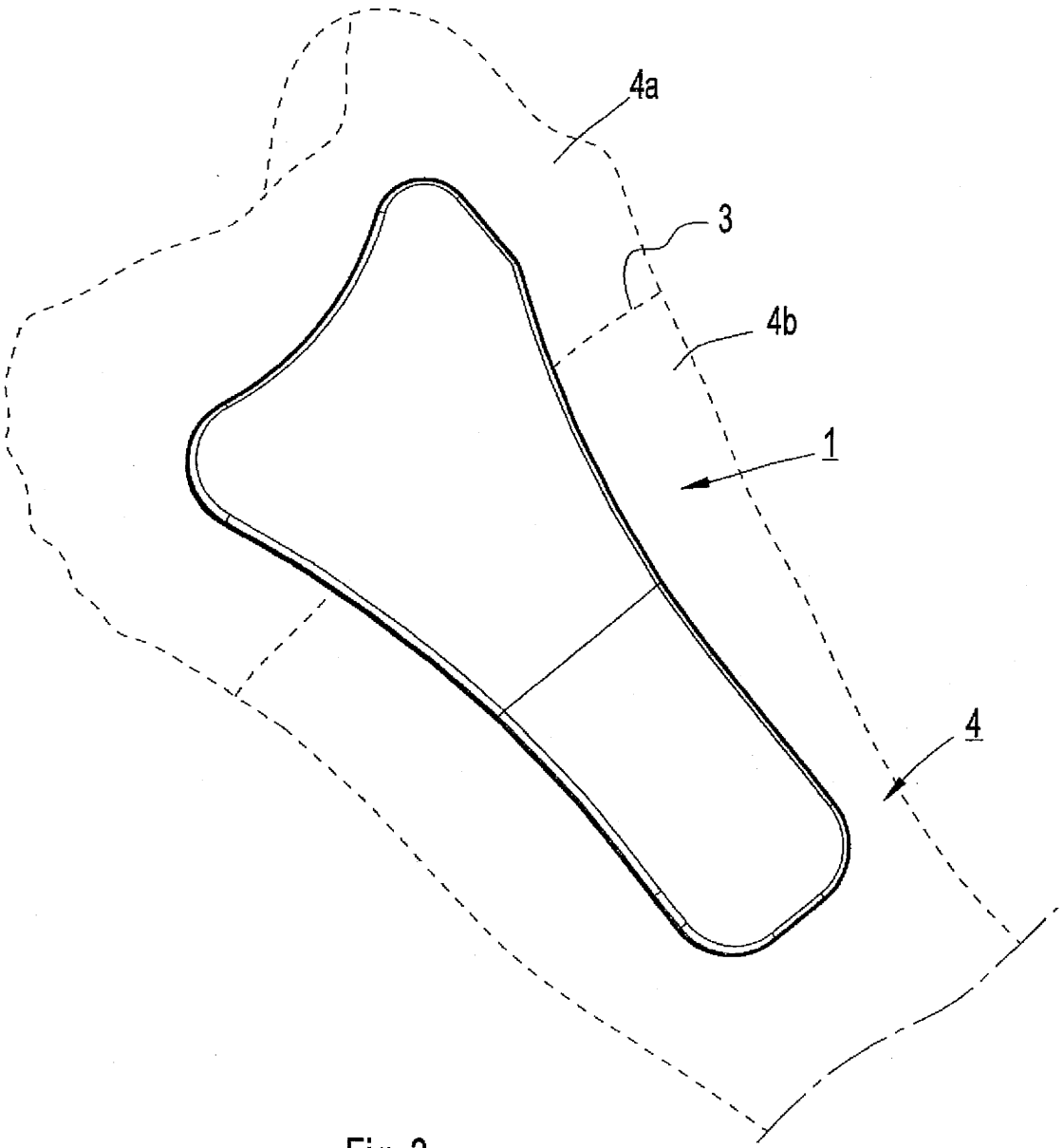

Fig. 3

WO 2010/002587

1/2

(12) INTERNATIONAL APPLICATION PUBLISHED UNDER THE PATENT COOPERATION TREATY (PCT)

(19) World Intellectual Property Organization
International Bureau

(43) International Publication Date
7 January 2010 (07.01.2010)

PCT

(10) International Publication Number
WO 2010/002587 A1

(51) International Patent Classification: *A61B 17/64* (2006.01)

(21) International Application Number: PCT/US2009/047612

(22) International Filing Date: 17 June 2009 (17.06.2009)

(25) Filing Language: English

(26) Publication Language: English

(30) Priority Data:
12/165,251 30 June 2008 (30.06.2008) US

(71) Applicant *(for all designated States except US)*: **DEPUY PRODUCTS, INC.** [US/US]; 700 Orthopaedic Drive, Warsaw, IN 46580 (US).

(72) Inventor; and
(75) Inventor/Applicant *(for US only)*: **SCHULZE, Dale, R.** [US/US]; 1514 Sweet Flag Cove, Fort Wayne, IN 46814 (US).

(74) Agents: **JHONSON, Philip, S.** et al.; Johnson & Johnson, One Johnson & Johnson Plaza, New Brunswick, NJ 08933 (US).

(81) Designated States *(unless otherwise indicated, for every kind of national protection available)*: AE, AG, AL, AM, AO, AT, AU, AZ, BA, BB, BG, BH, BR, BW, BY, BZ, CA, CH, CL, CN, CO, CR, CU, CZ, DE, DK, DM, DO, DZ, EC, EE, EG, ES, FI, GB, GD, GE, GH, GM, GT, HN, HR, HU, ID, IL, IN, IS, JP, KE, KG, KM, KN, KP, KR, KZ, LA, LC, LK, LR, LS, LT, LU, LY, MA, MD, ME, MG, MK, MN, MW, MX, MY, MZ, NA, NG, NI, NO, NZ, OM, PE, PG, PH, PL, PT, RO, RS, RU, SC, SD, SE, SG, SK, SL, SM, ST, SV, SY, TJ, TM, TN, TR, TT, TZ, UA, UG, US, UZ, VC, VN, ZA, ZM, ZW.

(84) Designated States *(unless otherwise indicated, for every kind of regional protection available)*: ARIPO (BW, GH, GM, KE, LS, MW, MZ, NA, SD, SL, SZ, TZ, UG, ZM, ZW), Eurasian (AM, AZ, BY, KG, KZ, MD, RU, TJ, TM), European (AT, BE, BG, CH, CY, CZ, DE, DK, EE, ES, FI, FR, GB, GR, HR, HU, IE, IS, IT, LT, LU, LV, MC, MK, MT, NL, NO, PL, PT, RO, SE, SI, SK, TR), OAPI (BF, BJ, CF, CG, CI, CM, GA, GN, GQ, GW, ML, MR, NE, SN, TD, TG).

Published:

— *with international search report (Art. 21(3))*

(54) Title: EXTERNAL FIXATOR

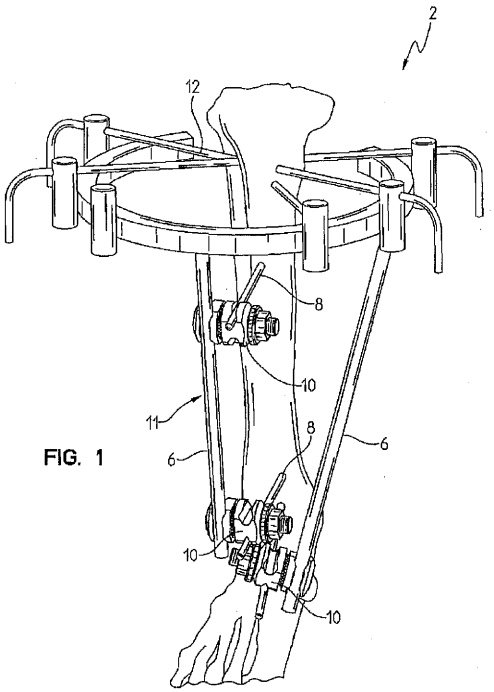

FIG. 1

(57) Abstract: An external fixator system (2) includes a fixation bar (6), a fixation pin (8), and a clamp assembly (10). The clamp assembly includes a first jaw pair (14), a second jaw pair (16), and a first spring (18) insert. The first jaw pair has a first upper jaw component (20) and a first lower jaw component (22) that collectively define a first passage configured to receive the fixation bar. The second jaw pair has a second upper jaw component (26) and a second lower jaw component (28) that collectively define a second passage (30) configured to receive the fixation pin. The first spring insert is positioned within the first passage and interposed between the first upper jaw component and the first lower jaw component. Advancement of the fixation bar into the first passage causes deflection of the first spring insert.

WO 2010/002587 A1

EXTERNAL FIXATOR

FIELD

[0001] This application relates generally to the field of orthopaedics, and more specifically to external fixators used to secure reduced long bones.

BACKGROUND

[0002] External fixation is a surgical treatment used to set bone fractures in which a cast would not allow proper alignment of the fracture. In this kind of reduction, holes are drilled into uninjured areas of bones around the fracture and special bolts or wires are screwed or otherwise advanced into the holes. Outside the body, a rod or a curved piece of metal with special joints joins the bolts to make a rigid support. External fixation is usually used when internal fixation is contraindicated, often to treat open fractures, or as a temporary solution.

[0003] There are two main types of external fixation. One is known as mono-lateral fixation where the metal external structure is on one side of the limb. The other is circular fixation, in which the metal structure is circular or an arch and surrounds the limb. Installation of the external fixator is performed in an operating room, normally under general anesthesia. Removal of the external frame and bolts can be done with no anesthesia in an office visit. Circular fixation external fixators are often used for fractures of long bones that are weight bearing such as the femur and tibia. It is known that bearing weight through a fracture by walking on it, for example, with the added support of the external fixator frame actually helps fractures to heal.

WO 2010/002588

1/2

(12) INTERNATIONAL APPLICATION PUBLISHED UNDER THE PATENT COOPERATION TREATY (PCT)

(19) World Intellectual Property Organization
International Bureau

(43) International Publication Date
7 January 2010 (07.01.2010)

PCT

(10) International Publication Number
WO 2010/002588 A1

(51) International Patent Classification:
A61B 17/72 (2006.01) *A61B 17/76* (2006.01)
A61B 17/78 (2006.01) *A61B 17/86* (2006.01)

(21) International Application Number:
PCT/US2009/047622

(22) International Filing Date:
17 June 2009 (17.06.2009)

(25) Filing Language: English

(26) Publication Language: English

(30) Priority Data:
12/164,475 30 June 2008 (30.06.2008) US

(71) Applicant *(for all designated States except US)*: **DEPUY PRODUCTS, INC.** [US/US]; 700 Orthopaedic Drive, Warsaw, IN 46580 (US).

(72) Inventors; and
(75) Inventors/Applicants *(for US only)*: **YAMAZAKI, Ken** [JP/JP]; 548-7 Shinanocho, Totsuka-ku, Kanagawa, 244-0801 (JP). **CHRISTIE, Charles, D.** [US/US]; 5099 W. Lakeview Park Dr., Warsaw, IN 46580 (US). **METZINGER, Anthony, J.** [US/US]; 2607 Hufman St., Winona Lake, IN 46590 (US). **BERTHUSEN, Andrew, H.** [US/US]; 1510 Brubaker St., Warsaw, IN 46580 (US).

(74) Agents: **MORENO, Victor, C.** et al.; Johnson & Johnson, One Johnson & Johnson Plaza, New Brunswick, NJ 08933 (US).

(81) Designated States *(unless otherwise indicated, for every kind of national protection available)*: AE, AG, AL, AM, AO, AT, AU, AZ, BA, BB, BG, BH, BR, BW, BY, BZ, CA, CH, CL, CN, CO, CR, CU, CZ, DE, DK, DM, DO, DZ, EC, EE, EG, ES, FI, GB, GD, GE, GH, GM, GT, HN, HR, HU, ID, IL, IN, IS, JP, KE, KG, KM, KN, KP, KR, KZ, LA, LC, LK, LR, LS, LT, LU, LY, MA, MD, ME, MG, MK, MN, MW, MX, MY, MZ, NA, NG, NI, NO, NZ, OM, PE, PG, PH, PL, PT, RO, RS, RU, SC, SD, SE, SG, SK, SL, SM, ST, SV, SY, TJ, TM, TN, TR, TT, TZ, UA, UG, US, UZ, VC, VN, ZA, ZM, ZW.

(84) Designated States *(unless otherwise indicated, for every kind of regional protection available)*: ARIPO (BW, GH, GM, KE, LS, MW, MZ, NA, SD, SL, SZ, TZ, UG, ZM,

[Continued on next page]

(54) Title: FRACTURE FIXATION APPARATUS

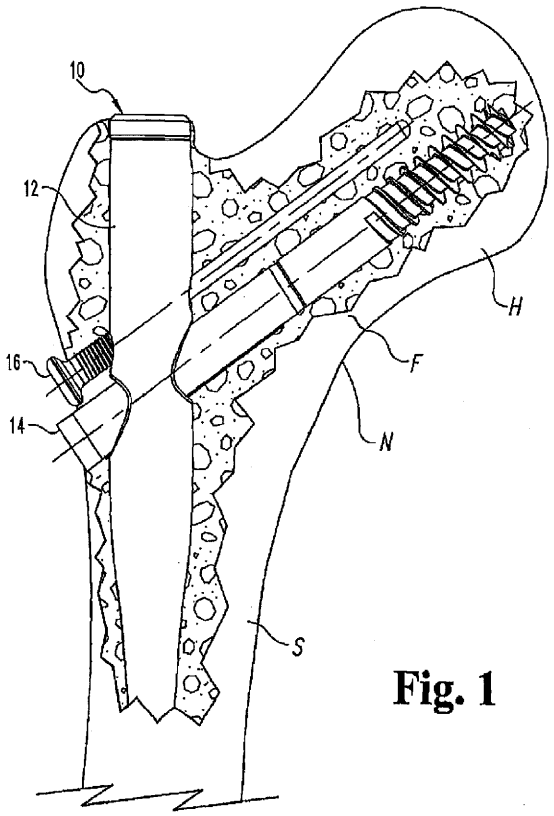

Fig. 1

(57) Abstract: An apparatus for treating a bone fracture comprises an intramedullary rod (12) extending through a first bone segment of a fractured bone. A lag screw assembly (14) extends through a first transverse aperture in the rod, while a control member (16) extends through a second transverse aperture longitudinally offset from the first aperture. The lag screw assembly includes a lag screw engaged to the second bone segment and a locking sleeve (40) mounted over a proximal portion of the lag screw. The locking sleeve defines a groove (44) aligned with the second aperture. The control member includes a distal portion penetrating the bone segments, an intermediate portion configured to engage the second aperture, and an enlarged head (65) configured to slidably engage the groove. The groove includes a terminus that contacts the head of the control member after a predetermined amount of lateral migration of the lag screw as the fracture collapses.

WO 2010/002588 A1

WO 2010/002588 A1

ZW), Eurasian (AM, AZ, BY, KG, KZ, MD, RU, TJ, TM), European (AT, BE, BG, CH, CY, CZ, DE, DK, EE, ES, FI, FR, GB, GR, HR, HU, IE, IS, IT, LT, LU, LV, MC, MK, MT, NL, NO, PL, PT, RO, SE, SI, SK, TR), OAPI (BF, BJ, CF, CG, CI, CM, GA, GN, GQ, GW, ML, MR, NE, SN, TD, TG).

Published:

— *with international search report (Art. 21(3))*

WO 2010/004261

1/2

(12) INTERNATIONAL APPLICATION PUBLISHED UNDER THE PATENT COOPERATION TREATY (PCT)

(19) World Intellectual Property Organization
International Bureau

(43) International Publication Date
14 January 2010 (14.01.2010)

PCT

(10) International Publication Number
WO 2010/004261 A2

(51) International Patent Classification:
A61L 27/50 (2006.01) *A61L 27/54* (2006.01)

(21) International Application Number:
PCT/GB2009/001653

(22) International Filing Date:
2 July 2009 (02.07.2009)

(25) Filing Language: English

(26) Publication Language: English

(30) Priority Data:
0812660.9 10 July 2008 (10.07.2008) GB

(71) Applicant *(for all designated States except US)*: **SMITH & NEPHEW PLC** [GB/GB]; 15 Adam Street, London WC2N 6LA (GB).

(72) Inventors; and
(75) Inventors/Applicants *(for US only)*: **WILSON, Darren, James** [GB/GB]; Smith & Nephew Research Centre, York Science Park, Heslington, York YO10 5DF (GB). **GUNNING, Paul, Alexander** [GB/GB]; Smith & Nephew Research Centre, York Science Park, Heslington, York YO10 5DF (GB). **MORGAN, Robert, Llewelyn** [GB/GB]; Smith & Nephew Research Centre, York Science Park, Heslington, York YO10 5DF (GB). **MILNER, Richard** [GB/GB]; Smith & Nephew Research Centre, York Science Park, Heslington, York YO10 5DF (GB). **HOWLING, Graeme** [GB/GB]; Smith & Nephew Research Centre, York Science Park, Heslington, York YO10 5DF (GB).

(74) Agent: **CONNORS, Martin**; Smith & Nephew Research Centre, York Science Park, Heslington, York YO10 5DF (GB).

(81) Designated States *(unless otherwise indicated, for every kind of national protection available)*: AE, AG, AL, AM, AO, AT, AU, AZ, BA, BB, BG, BH, BR, BW, BY, BZ, CA, CH, CL, CN, CO, CR, CU, CZ, DE, DK, DM, DO, DZ, EC, EE, EG, ES, FI, GB, GD, GE, GH, GM, GT, HN, HR, HU, ID, IL, IN, IS, JP, KE, KG, KM, KN, KP, KR, KZ, LA, LC, LK, LR, LS, LT, LU, LY, MA, MD, ME, MG, MK, MN, MW, MX, MY, MZ, NA, NG, NI, NO, NZ, OM, PE, PG, PH, PL, PT, RO, RS, RU, SC, SD, SE, SG, SK, SL, SM, ST, SV, SY, TJ, TM, TN, TR, TT, TZ, UA, UG, US, UZ, VC, VN, ZA, ZM, ZW.

(84) Designated States *(unless otherwise indicated, for every kind of regional protection available)*: ARIPO (BW, GH, GM, KE, LS, MW, MZ, NA, SD, SL, SZ, TZ, UG, ZM, ZW), Eurasian (AM, AZ, BY, KG, KZ, MD, RU, TJ, TM), European (AT, BE, BG, CH, CY, CZ, DE, DK, EE, ES, FI, FR, GB, GR, HR, HU, IE, IS, IT, LT, LU, LV, MC, MK, MT, NL, NO, PL, PT, RO, SE, SI, SK, SM, TR), OAPI (BF, BJ, CF, CG, CI, CM, GA, GN, GQ, GW, ML, MR, NE, SN, TD, TG).

Published:

— *without international search report and to be republished upon receipt of that report (Rule 48.2(g))*

(54) Title: TEXTURED MEDICAL IMPLANTS

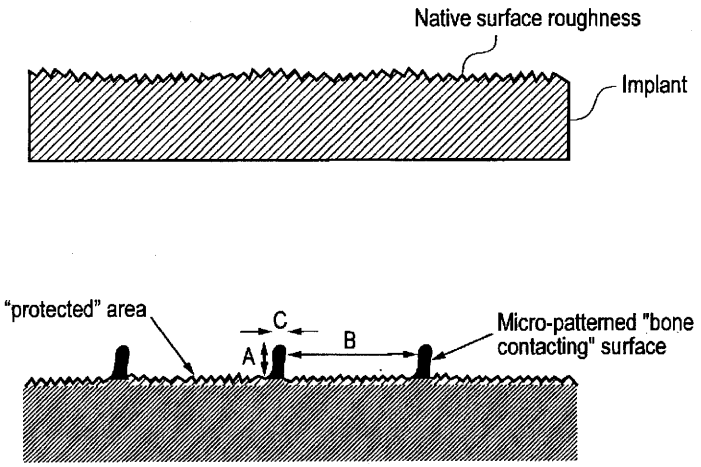

A = 100-200μm ; B = 1- 2 mm ; C = 20- 50μm

FIG. 3

(57) Abstract: There invention relates to a medical implant having a therapeutic agent immobilised thereon, the implant having a surface asperity such that the therapeutic agent is localised on the implant in a manner whereby the therapeutic agent does not come into contact with the host tissue during implantation.

WO 2010/004261 A2

WO 2010/004261

2/2

SUMMARY OF THE INVENTION

According to a first aspect of the invention there is provided a medical implant having a therapeutic agent immobilised thereon, at least a portion of the implant on which the therapeutic agent is immobilised having a tissue-contacting surface with an asperity such that the therapeutic agent does not extend beyond the tissue-contacting surface of the implant

According to a second aspect of the invention there is provided a method of producing a medical implant having a therapeutic agent immobilised thereon, at least a portion of the implant on which the therapeutic agent is immobilised having a tissue-contacting surface with an asperity such that the therapeutic agent does not extend beyond the tissue-contacting surface of the implant, said method comprising the steps of;

i) forming at least one intrusion and/or a plurality of protrusions on the implant surface;

ii) immobilising a therapeutic agent within the intrusion and/or within the space between the protrusions

According to a third aspect of the invention there is provided an implant or a method as herein described with reference to the accompanying Figures and Examples.

The term "medical implant" herein refers to medical devices which are indwelling or implanted in an animal, including humans and non-human animals. These implants can be either permanent or temporary. Examples of such medical implants include orthopaedic implants such as joint prostheses, screws, nails, nuts, bolts, plates, rods, pins, wires, inserters, osteoports, spinal cages, external fixaters such as halo systems and other orthopaedic devices for stabilization or fixation of fractures or disarticulations. Other devices may include non-orthopaedic devices such as tracheostomy devices, intraurethral and other genitourinary implants, stylets, dilators, stents, wire guides and access ports of subcutaneously implanted vascular catheters.

WO 2010/005076

1/3

(12) 特許協力条約に基づいて公開された国際出願

(19) 世界知的所有権機関
国際事務局

(43) 国際公開日
2010年1月14日(14.01.2010)

PCT

(10) 国際公開番号
WO 2010/005076 A1

(51) 国際特許分類:
A61B 17/58 (2006.01)

(21) 国際出願番号: PCT/JP2009/062590

(22) 国際出願日: 2009年7月10日(10.07.2009)

(25) 国際出願の言語: 日本語

(26) 国際公開の言語: 日本語

(30) 優先権データ:
特願 2008-181820 2008年7月11日(11.07.2008) JP

(71) 出願人 (米国を除く全ての指定国について): 学校法人 久留米大学(**Kurume University**) [JP/JP]; 〒8300011 福岡県久留米市旭町６７番地 Fukuoka (JP).

(72) 発明者; および
(75) 発明者/出願人 (米国についてのみ): 中村 英智 (**NAKAMURA, Hidetomo**) [JP/JP]; 〒8300011 福岡県久留米市旭町６７番地 久留米大学医学部内 Fukuoka (JP).

(74) 代理人: 梶原 克彦(**KAJIHARA, Katsuhiko**); 〒8300017 福岡県久留米市日吉町１８番地の５５ Fukuoka (JP).

(81) 指定国 (表示のない限り、全ての種類の国内保護が可能): AE, AG, AL, AM, AO, AT, AU, AZ, BA, BB, BG, BH, BR, BW, BY, BZ, CA, CH, CL, CN, CO, CR, CU, CZ, DE, DK, DM, DO, DZ, EC, EE, EG, ES, FI, GB, GD, GE, GH, GM, GT, HN, HR, HU, ID, IL, IN, IS, JP, KE, KG, KM, KN, KP, KR, KZ, LA, LC, LK, LR, LS, LT, LU, LY, MA, MD, ME, MG, MK, MN, MW, MX, MY, MZ, NA, NG, NI, NO, NZ, OM, PE, PG, PH, PL, PT, RO, RS, RU, SC, SD, SE, SG, SK, SL, SM, ST, SV, SY, TJ, TM, TN, TR, TT, TZ, UA, UG, US, UZ, VC, VN, ZA, ZM, ZW.

(84) 指定国 (表示のない限り、全ての種類の広域保護が可能): ARIPO (BW, GH, GM, KE, LS, MW, MZ, NA, SD, SL, SZ, TZ, UG, ZM, ZW), ユーラシア (AM, AZ, BY, KG, KZ, MD, RU, TJ, TM), ヨーロッパ (AT, BE, BG, CH, CY, CZ, DE, DK, EE, ES, FI, FR, GB, GR, HR, HU, IE, IS, IT, LT, LU, LV, MC, MK, MT, NL, NO, PL, PT, RO, SE, SI, SK, SM, TR), OAPI (BF, BJ, CF, CG, CI, CM, GA, GN, GQ, GW, ML, MR, NE, SN, TD, TG).

添付公開書類:
— 国際調査報告（条約第21条(3)）

(54) Title: BONE CONNECTING DEVICE

(54) 発明の名称: 骨接合具

[図1]

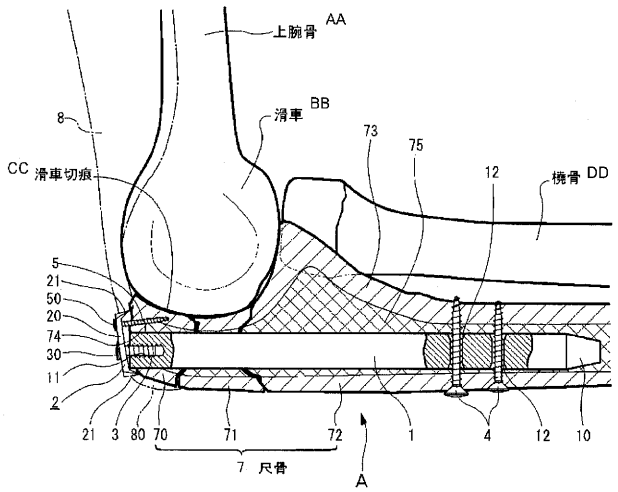

AA HUMERUS
BB TROCHLEA
CC TROCHLEAR NOTCH
DD RADIUS
7 ULNA

(57) Abstract: Provided is a bone connecting device which can prevent postoperative discomfort experienced by an operated patient, shows little postoperative morphological change and can prevent the application of a non-inherent restriction on the movable range of the elbow joint due to the deformation of the articular surface morphology of the trochlear notch that is caused by a morphological change. A bone connecting device (A) comprising an intramedullary nail (1) which can be inserted into the ulnar marrow, a fixing washer (2) provided with a spike (21) which can be set up on the outer face in the olecranal side of the ulna, a base fixing screw (3) and top fixing screws (4) and auxiliary screws (5) each in a required number. In the intramedullary nail (1), a screw hole (11), which is formed in the basal end part and in which the base fixing screw (3) can be screwed, and a top fixing screw-through hole (12), which is formed in the front end side and penetrates in the direction crossing the lengthwise direction, are formed. In the fixing washer (2), a base fixing screw-through hole (22), through which the base fixing screw (3) passes, and an auxiliary screw-through hole (23), through which the auxiliary screw (5) passes, are formed.

(57) 要約:

[続葉有]

WO 2010/005076 A1

施術された患者本人に施術後の違和感が生じることを防止することができ、施術後に形態が変化しにくく、形態が変わることに起因する滑車切痕の関節面形状の変形により肘関節の可動域に本来とは異なる制限が生じることを防止できる骨接合具を提供する。　骨接合具(A)は、尺骨の髄内に通すことができる髄内釘(1)と、尺骨の肘頭側の外面に立てることができるスパイク(21)を有する固定用座金(2)と、基部固定ネジ(3)及びそれぞれ所要数の先部固定ネジ(4)と補助ネジ(5)を備えている。髄内釘(1)には、基端部に設けられ基部固定ネジ(3)が螺着できるネジ孔(11)と、先部側に設けられ長さ方向と交差する方向に貫通した先部固定ネジ用通し孔(12)が形成されている。固定用座金(2)には基部固定ネジ(3)を通す基部固定ネジ用通し孔(22)と、補助ネジ(5)を通す補助ネジ用通し孔(23)が形成されている。

WO 2010/005076

3/3

[図1]

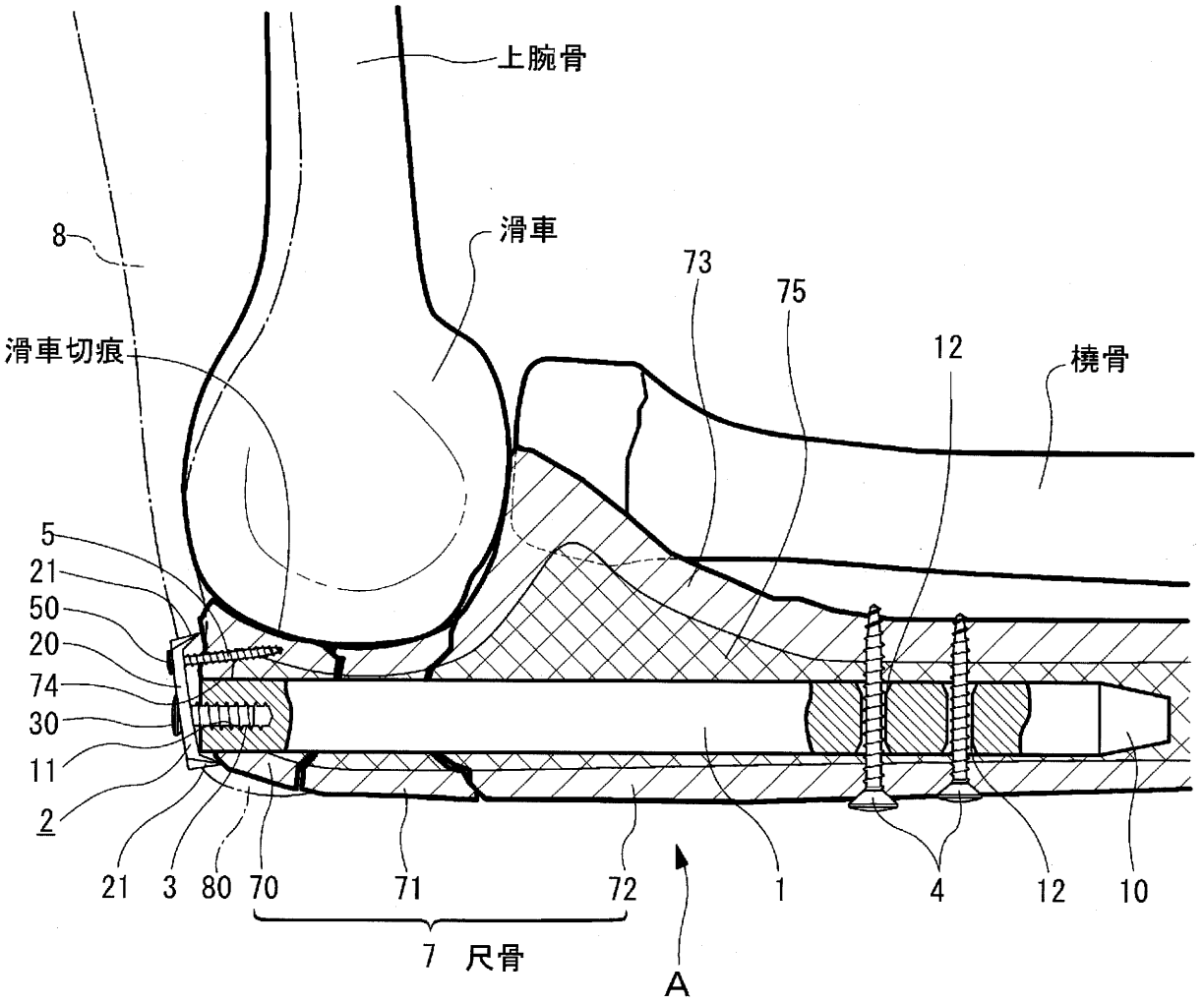

[図2]

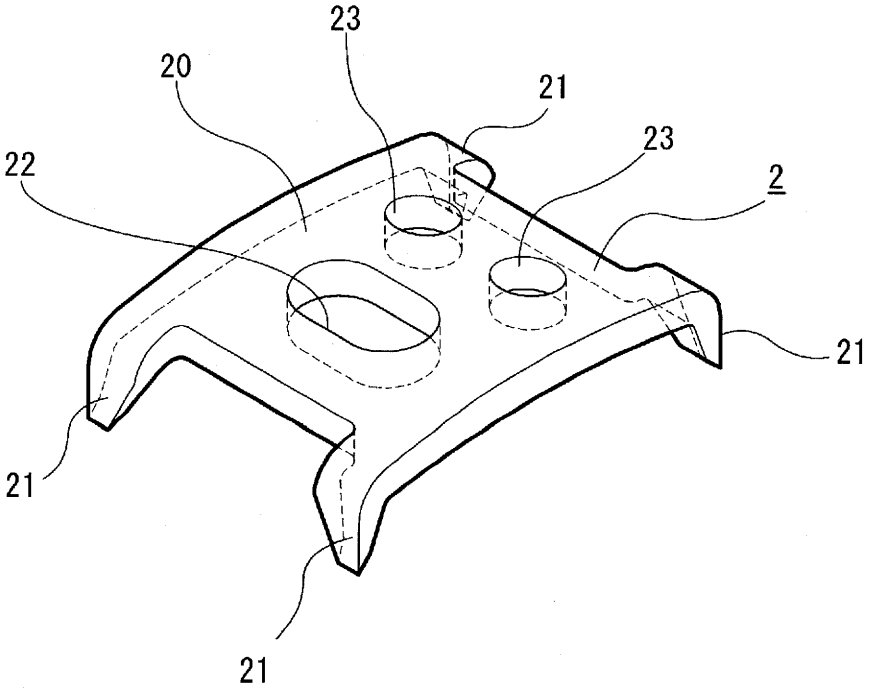

WO 2010/006195

1/2

(12) INTERNATIONAL APPLICATION PUBLISHED UNDER THE PATENT COOPERATION TREATY (PCT)

(19) World Intellectual Property Organization
International Bureau

(43) International Publication Date
14 January 2010 (14.01.2010)

PCT

(10) International Publication Number
WO 2010/006195 A1

(51) International Patent Classification:
A61B 17/72 (2006.01)

(21) International Application Number:
PCT/US2009/050149

(22) International Filing Date:
9 July 2009 (09.07.2009)

(25) Filing Language: English

(26) Publication Language: English

(30) Priority Data:

61/079,132	9 July 2008 (09.07.2008)	US
61/079,130	9 July 2008 (09.07.2008)	US

(71) Applicant *(for all designated States except US)*: **AMEI TECHNOLOGIES, INC.** [US/US]; 1105 North Market Street, Suite 1300, Wilmington, DE 19899 (US).

(72) Inventor; and
(75) Inventor/Applicant *(for US only)*: **BRIGIDO, Stephen** [US/US]; 5210 Old Bethlehem Pike, Bethlehem, PA 18015 (US).

(74) Agent: **MCSPADDEN, William, D.**; Baker & McKenzie LLP, 2001 Ross Avenue, Suite 2300, Dallas, TX 75201 (US).

(81) Designated States *(unless otherwise indicated, for every kind of national protection available)*: AE, AG, AL, AM, AO, AT, AU, AZ, BA, BB, BG, BH, BR, BW, BY, BZ, CA, CH, CL, CN, CO, CR, CU, CZ, DE, DK, DM, DO, DZ, EC, EE, EG, ES, FI, GB, GD, GE, GH, GM, GT, HN, HR, HU, ID, IL, IN, IS, JP, KE, KG, KM, KN, KP, KR, KZ, LA, LC, LK, LR, LS, LT, LU, LY, MA, MD, ME, MG, MK, MN, MW, MX, MY, MZ, NA, NG, NI, NO, NZ, OM, PE, PG, PH, PL, PT, RO, RS, RU, SC, SD, SE, SG, SK, SL, SM, ST, SV, SY, TJ, TM, TN, TR, TT, TZ, UA, UG, US, UZ, VC, VN, ZA, ZM, ZW.

(84) Designated States *(unless otherwise indicated, for every kind of regional protection available)*: ARIPO (BW, GH, GM, KE, LS, MW, MZ, NA, SD, SL, SZ, TZ, UG, ZM, ZW), Eurasian (AM, AZ, BY, KG, KZ, MD, RU, TJ, TM), European (AT, BE, BG, CH, CY, CZ, DE, DK, EE, ES, FI, FR, GB, GR, HR, HU, IE, IS, IT, LT, LU, LV, MC, MK, MT, NL, NO, PL, PT, RO, SE, SI, SK, SM, TR), OAPI (BF, BJ, CF, CG, CI, CM, GA, GN, GQ, GW, ML, MR, NE, SN, TD, TG).

Declarations under Rule 4.17:

— *of inventorship (Rule 4.17(iv))*

Published:

— *with international search report (Art. 21(3))*

(54) Title: ANKLE ARTHRODESIS NAIL AND OUTRIGGER ASSEMBLY

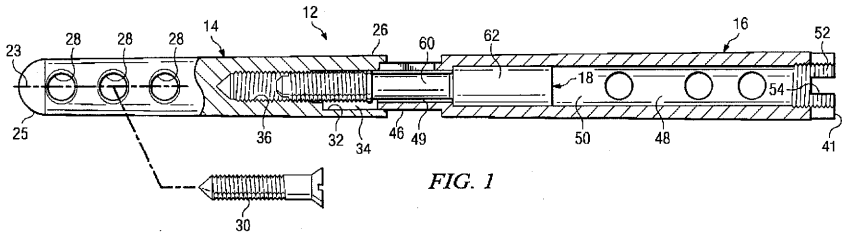

FIG. 1

(57) Abstract: An intramedullary fixation device having a distal section; a proximal section; a connecting member for adjustably securing the distal and proximal sections end to end along a longitudinal axis; means for securing the proximal section to a first bone; and means for securing the distal section to a least one different bone. The connecting member is rotated to provide compression across a bone arthrodesis site to be stabilized and fused. Also described is a method of utilizing the intramedullary fixation device with an outrigger assembly.

WO 2010/006195 A1

5TH METATARSAL (JONES FRACTURE)

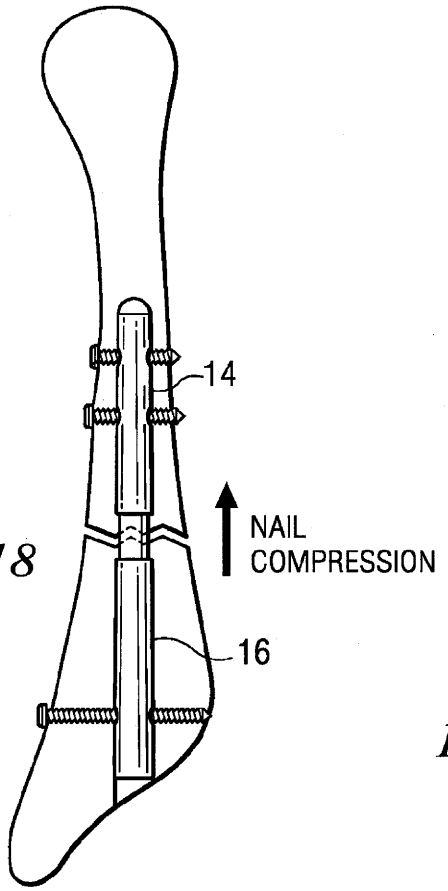

FIG. 18

LONG BONE FRACTURE

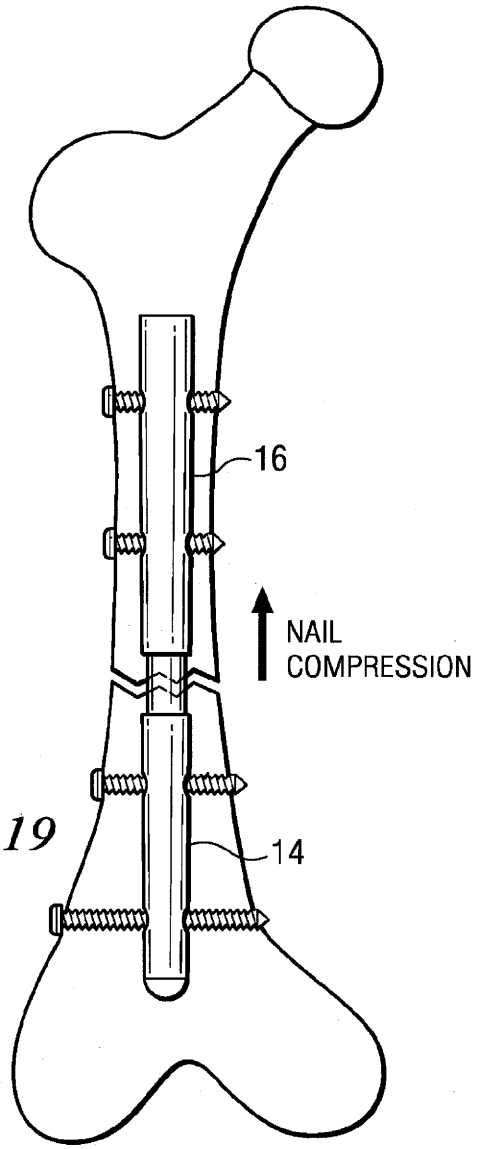

FIG. 19

SUBTALAR JOINT FUSION

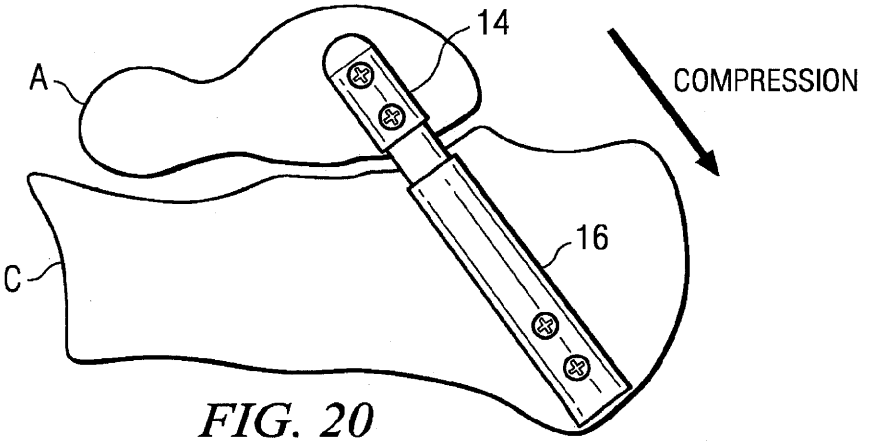

FIG. 20

(12) INTERNATIONAL APPLICATION PUBLISHED UNDER THE PATENT COOPERATION TREATY (PCT)

(19) World Intellectual Property Organization
International Bureau

(43) International Publication Date
21 January 2010 (21.01.2010)

PCT

(10) International Publication Number
WO 2010/006453 A1

(51) International Patent Classification:
A61B 17/72 (2006.01) *A61F 2/46* (2006.01)
A61B 17/88 (2006.01) *A61B 17/86* (2006.01)

(21) International Application Number:
PCT/CH2008/000322

(22) International Filing Date:
18 July 2008 (18.07.2008)

(25) Filing Language: English

(26) Publication Language: English

(71) Applicants and
(72) Inventors: **FIECHTER, Meinrad** [CH/CH]; Stutzackerweg 6, CH-3110 Münsingen (CH). **SOMMER, Thomas** [CH/CH]; Herzogstrasse 9, CH-3014 Bern (CH). **MAURER, Samuel** [CH/CH]; Wyttenbachstrasse 10, CH-3013 Bern (CH).

(74) Agents: **ROSHARDT, Werner, A.** et al.; Keller & Partner Patentanwälte AG, Schmiedenplatz 5, Postfach, CH-3000 Bern 7 (CH).

(81) Designated States *(unless otherwise indicated, for every kind of national protection available)*: AE, AG, AL, AM, AO, AT, AU, AZ, BA, BB, BG, BH, BR, BW, BY, BZ, CA, CH, CN, CO, CR, CU, CZ, DE, DK, DM, DO, DZ, EC, EE, EG, ES, FI, GB, GD, GE, GH, GM, GT, HN, HR, HU, ID, IL, IN, IS, JP, KE, KG, KM, KN, KP, KR, KZ, LA, LC, LK, LR, LS, LT, LU, LY, MA, MD, ME, MG, MK, MN, MW, MX, MY, MZ, NA, NG, NI, NO, NZ, OM, PG, PH, PL, PT, RO, RS, RU, SC, SD, SE, SG, SK, SL, SM, ST, SV, SY, TJ, TM, TN, TR, TT, TZ, UA, UG, US, UZ, VC, VN, ZA, ZM, ZW.

(84) Designated States *(unless otherwise indicated, for every kind of regional protection available)*: ARIPO (BW, GH, GM, KE, LS, MW, MZ, NA, SD, SL, SZ, TZ, UG, ZM, ZW), Eurasian (AM, AZ, BY, KG, KZ, MD, RU, TJ, TM), European (AT, BE, BG, CH, CY, CZ, DE, DK, EE, ES, FI, FR, GB, GR, HR, HU, IE, IS, IT, LT, LU, LV, MC, MT, NL, NO, PL, PT, RO, SE, SI, SK, TR), OAPI (BF, BJ, CF, CG, CI, CM, GA, GN, GQ, GW, ML, MR, NE, SN, TD, TG).

Published:

— *with international search report (Art. 21(3))*

(54) Title: INTRAMEDULLARY NAIL

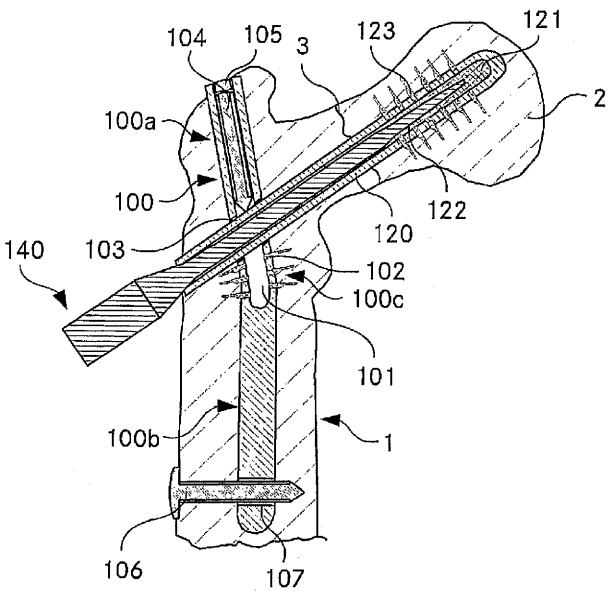

Fig. 1

(57) Abstract: An intramedullary nail (100) for stabilizing a fractured bone is provided with at least a first duct (101) for at least partially receiving a bonding agent liquefiable by the application of energy. The duct (101) extends continuously from a proximal region of the nail (100) to a distal region of the nail (100) and whereas in the distal region the nail (100) is provided by at least one opening (102) connecting the duct (101) with an outer surface of the nail (100). When using the intramedullary nail (100), it is no longer necessary for distal locking to carry out the difficult process of precisely drilling a hole into the bone in order to be able to set locking bolts or screws, which simplifies the process and avoids the need for additional incisions. A target device is no longer necessary. Using a bonding agent that may be activated by energy allows for fast activation in the right moment (i. e. when the intramedullary nail is correctly positioned within the bone).

WO 2010/006453 A1